09/08/99

TIP PROJECT: R–2915D

See Sheet 1-A For Index of Sheets
See Sheet 1-B For Conventional Symbols

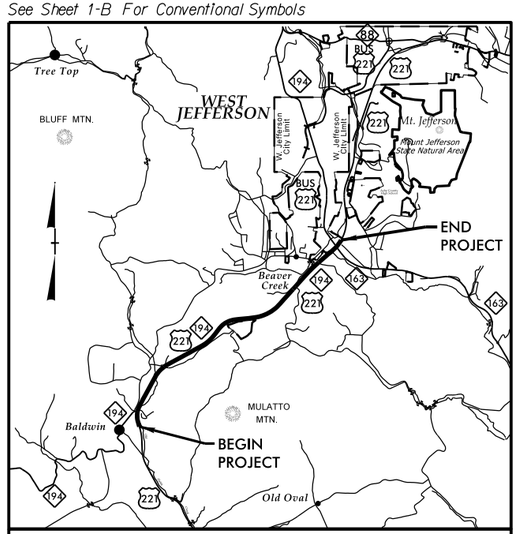

VICINITY MAP

ROW PLANS

STATE OF NORTH CAROLINA
DIVISION OF HIGHWAYS

ASHE COUNTY

STATE	STATE PROJECT REFERENCE NO.	SHEET NO.	TOTAL SHEETS
N.C.	R–2915D	1	

STATE PROJ. NO.	F.A. PROJ. NO.	DESCRIPTION
34518.1.1	STP–0221(42)	P.E.
34518.2.4	STP–0221(42)	R/W,UTIL.

LOCATION: US 221 FROM SOUTH OF NC 194 TO US 221 BYPASS

TYPE OF WORK: GRADING, PAVING, DRAINAGE, CURB AND GUTTER, SIGNALS, AND CULVERT

PRELIMINARY PLANS
DO NOT USE FOR CONSTRUCTION

NAD 83/CORS

BEGIN CONSTRUCTION
–L– STA 453+03.05 =
–TIE– STA 14+00.00

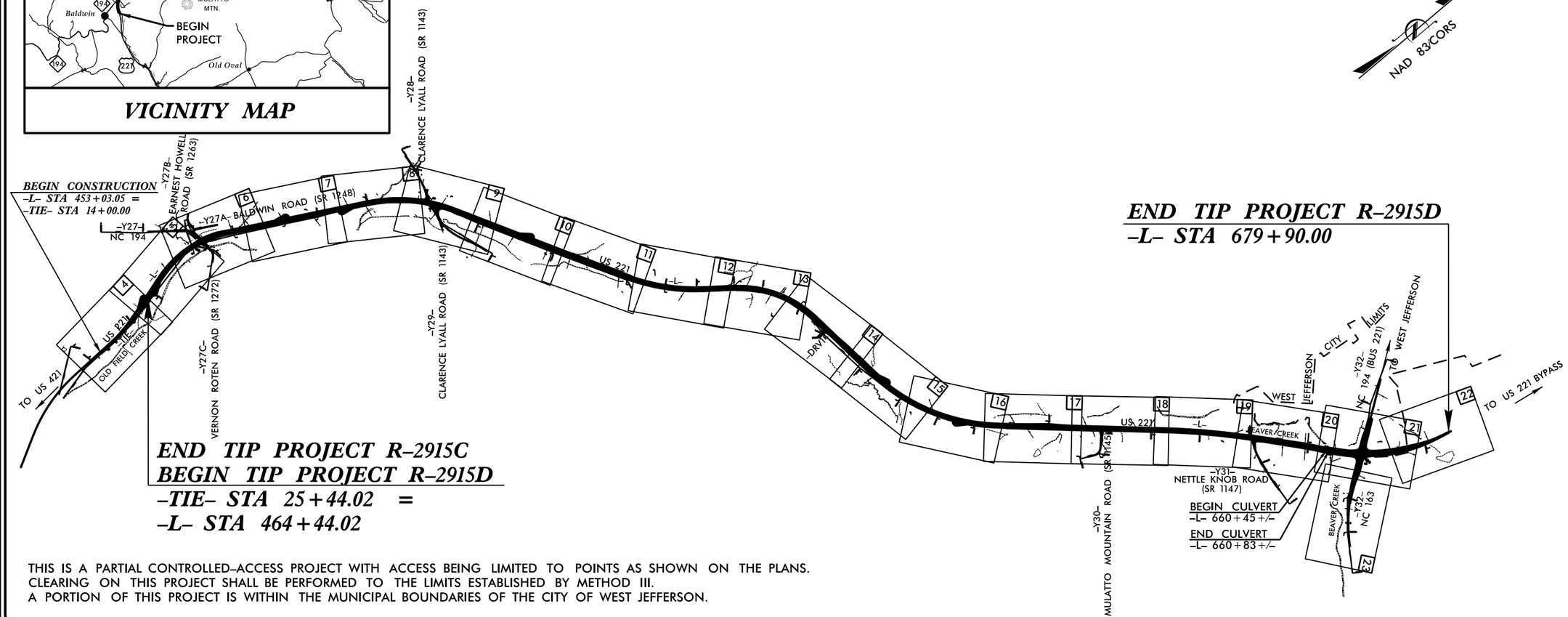

END TIP PROJECT R–2915D
–L– STA 679+90.00

END TIP PROJECT R–2915C
BEGIN TIP PROJECT R–2915D
–TIE– STA 25+44.02 =
–L– STA 464+44.02

THIS IS A PARTIAL CONTROLLED–ACCESS PROJECT WITH ACCESS BEING LIMITED TO POINTS AS SHOWN ON THE PLANS.
CLEARING ON THIS PROJECT SHALL BE PERFORMED TO THE LIMITS ESTABLISHED BY METHOD III.
A PORTION OF THIS PROJECT IS WITHIN THE MUNICIPAL BOUNDARIES OF THE CITY OF WEST JEFFERSON.

CONTRACT:

GRAPHIC SCALES

50 25 0 50 100
PLANS

50 25 0 50 100
PROFILE (HORIZONTAL)

10 5 0 10 20
PROFILE (VERTICAL)

DESIGN DATA

ADT 2015 = 14715
ADT 2035 = 25000
DHV = 9 %
D = 55 %
T = 9 % *
V = 60 MPH
* TTST =2 DUAL 7
FUNC CLASS =
Major Collector
Statewide Tier

PROJECT LENGTH

LENGTH OF ROADWAY PROJECT R–2915D	=	4.290 MI
LENGTH OF STRUCTURE PROJECT R–2915D	=	0.007 MI
TOTAL LENGTH OF PROJECT R–2915D	=	4.297 MI

Prepared In the Office of:
KCI Associates of N.C., P.A.
4601 Six Forks Road
Landmark Center II, Suite 220
Raleigh, NC 27609
Phone (919) 783-9214
Fax (919) 783-9266

2012 STANDARD SPECIFICATIONS

RIGHT OF WAY DATE:
JULY 30, 2013

LETTING DATE:
FEBRUARY 17, 2015

NCDOT CONTACT: BRENDA MOORE, PE
PROJECT ENGINEER – ROADWAY DESIGN

Plans Prepared For:
DIVISION OF HIGHWAYS
1000 Birch Ridge Dr.
Raleigh NC, 27610

CHARLES L. FLOWE, P.E.
PROJECT ENGINEER

BARRY C. SMITH, P.E.
PROJECT DESIGN ENGINEER

HYDRAULICS ENGINEER
SIGNATURE: P.E.

ROADWAY DESIGN ENGINEER
SIGNATURE: P.E.

STATE OF NORTH CAROLINA DEPARTMENT OF TRANSPORTATION

21-JAN-2014 09:37
R:\Roadway\Proj\R2915D_Rdy_tsh.dgn
$$$$USERNAME$$$$

04/16/11

PROJECT REFERENCE NO.	SHEET NO.
R-2915D	1-B

Note: Not to Scale

**S.U.E. = Subsurface Utility Engineering*

STATE OF NORTH CAROLINA
DIVISION OF HIGHWAYS

CONVENTIONAL PLAN SHEET SYMBOLS

BOUNDARIES AND PROPERTY:

- State Line
- County Line
- Township Line
- City Line
- Reservation Line
- Property Line
- Existing Iron Pin — EIP
- Property Corner
- Property Monument — ECM
- Parcel/Sequence Number — 123
- Existing Fence Line
- Proposed Woven Wire Fence
- Proposed Chain Link Fence
- Proposed Barbed Wire Fence
- Existing Wetland Boundary — WLB
- Proposed Wetland Boundary — WLB
- Existing Endangered Animal Boundary — EAB
- Existing Endangered Plant Boundary — EPB
- Known Soil Contamination: Area or Site
- Potential Soil Contamination: Area or Site

BUILDINGS AND OTHER CULTURE:

- Gas Pump Vent or U/G Tank Cap
- Sign — S
- Well — W
- Small Mine
- Foundation
- Area Outline
- Cemetery
- Building
- School
- Church
- Dam

HYDROLOGY:

- Stream or Body of Water
- Hydro, Pool or Reservoir
- Jurisdictional Stream — JS
- Buffer Zone 1 — BZ 1
- Buffer Zone 2 — BZ 2
- Flow Arrow
- Disappearing Stream
- Spring
- Wetland
- Proposed Lateral, Tail, Head Ditch — FLOW
- False Sump

RAILROADS:

- Standard Gauge — CSX TRANSPORTATION
- RR Signal Milepost — MILEPOST 35
- Switch — SWITCH
- RR Abandoned
- RR Dismantled

RIGHT OF WAY:

- Baseline Control Point
- Existing Right of Way Marker
- Existing Right of Way Line
- Proposed Right of Way Line — RW
- Proposed Right of Way Line with Iron Pin and Cap Marker — RW
- Proposed Right of Way Line with Concrete or Granite R/W Marker — RW
- Proposed Control of Access Line with Concrete C/A Marker — CA
- Existing Control of Access — CA
- Proposed Control of Access — CA
- Existing Easement Line — E
- Proposed Temporary Construction Easement — E
- Proposed Temporary Drainage Easement — TDE
- Proposed Permanent Drainage Easement — PDE
- Proposed Permanent Drainage / Utility Easement — DUE
- Proposed Permanent Utility Easement — PUE
- Proposed Temporary Utility Easement — TUE
- Proposed Aerial Utility Easement — AUE
- Proposed Permanent Easement with Iron Pin and Cap Marker

ROADS AND RELATED FEATURES:

- Existing Edge of Pavement
- Existing Curb
- Proposed Slope Stakes Cut — C
- Proposed Slope Stakes Fill — F
- Proposed Curb Ramp — CR
- Existing Metal Guardrail
- Proposed Guardrail
- Existing Cable Guiderail
- Proposed Cable Guiderail
- Equality Symbol
- Pavement Removal

VEGETATION:

- Single Tree
- Single Shrub
- Hedge
- Woods Line
- Orchard
- Vineyard — Vineyard

EXISTING STRUCTURES:

MAJOR:

- Bridge, Tunnel or Box Culvert — CONC
- Bridge Wing Wall, Head Wall and End Wall — CONC WW

MINOR:

- Head and End Wall — CONC HW
- Pipe Culvert
- Footbridge
- Drainage Box: Catch Basin, DI or JB — CB
- Paved Ditch Gutter
- Storm Sewer Manhole — S
- Storm Sewer — S

UTILITIES:

POWER:

- Existing Power Pole
- Proposed Power Pole
- Existing Joint Use Pole
- Proposed Joint Use Pole
- Power Manhole — P
- Power Line Tower
- Power Transformer
- U/G Power Cable Hand Hole
- H-Frame Pole
- Recorded U/G Power Line — P
- Designated U/G Power Line (S.U.E.*) — P

TELEPHONE:

- Existing Telephone Pole
- Proposed Telephone Pole
- Telephone Manhole — T
- Telephone Booth
- Telephone Pedestal — T
- Telephone Cell Tower
- U/G Telephone Cable Hand Hole — HH
- Recorded U/G Telephone Cable — T
- Designated U/G Telephone Cable (S.U.E.*) — T
- Recorded U/G Telephone Conduit — TC
- Designated U/G Telephone Conduit (S.U.E.*) — TC
- Recorded U/G Fiber Optics Cable — T FO
- Designated U/G Fiber Optics Cable (S.U.E.*) — T FO

WATER:

- Water Manhole — W
- Water Meter
- Water Valve
- Water Hydrant
- Recorded U/G Water Line — W
- Designated U/G Water Line (S.U.E.*) — W
- Above Ground Water Line — A/G Water

TV:

- TV Satellite Dish
- TV Pedestal — C
- TV Tower
- U/G TV Cable Hand Hole — HH
- Recorded U/G TV Cable — TV
- Designated U/G TV Cable (S.U.E.*) — TV
- Recorded U/G Fiber Optic Cable — TV FO
- Designated U/G Fiber Optic Cable (S.U.E.*) — TV FO

GAS:

- Gas Valve
- Gas Meter
- Recorded U/G Gas Line — G
- Designated U/G Gas Line (S.U.E.*) — G
- Above Ground Gas Line — A/G Gas

SANITARY SEWER:

- Sanitary Sewer Manhole
- Sanitary Sewer Cleanout
- U/G Sanitary Sewer Line — SS
- Above Ground Sanitary Sewer — A/G Sanitary Sewer
- Recorded SS Forced Main Line — FSS
- Designated SS Forced Main Line (S.U.E.*) — FSS

MISCELLANEOUS:

- Utility Pole
- Utility Pole with Base
- Utility Located Object
- Utility Traffic Signal Box — S
- Utility Unknown U/G Line — ?UTL
- U/G Tank; Water, Gas, Oil
- Underground Storage Tank, Approx. Loc. — UST
- A/G Tank; Water, Gas, Oil
- Geoenvironmental Boring
- U/G Test Hole (S.U.E.*)
- Abandoned According to Utility Records — AATUR
- End of Information — E.O.I.

6/2/99

PAVEMENT SCHEDULE

PRELIMINARY PAVEMENT DESIGN

C1	PROP. APPROX. 3" ASPHALT CONCRETE SURFACE COURSE, TYPE S9.5B, AT AN AVERAGE RATE OF 168 LBS. PER SQ. YD. IN EACH OF TWO LAYERS.
C2	PROP. VAR. DEPTH ASPHALT CONCRETE SURFACE COURSE, TYPE S9.5B, AT AN AVERAGE RATE OF 112 LBS. PER SQ. YD. PER 1" DEPTH. TO BE PLACED IN LAYERS NOT TO EXCEED 2" IN DEPTH.
D1	PROP. APPROX. 2.5" ASPHALT CONCRETE INTERMEDIATE COURSE, TYPE I19.0B, AT AN AVERAGE RATE OF 285 LBS. PER SQ. YD.
D2	PROP. APPROX. 3" ASPHALT CONCRETE INTERMEDIATE COURSE, TYPE I19.0B, AT AN AVERAGE RATE OF 342 LBS. PER SQ. YD.
D3	PROP. APPROX. 4" ASPHALT CONCRETE INTERMEDIATE COURSE, TYPE I19.0B, AT AN AVERAGE RATE OF 456 LBS. PER SQ. YD.
D4	PROP. VAR. DEPTH ASPHALT CONCRETE INTERMEDIATE COURSE, TYPE I19.0B, AT AN AVERAGE RATE OF 114 LBS. PER SQ. YD. PER 1" DEPTH, TO BE PLACED IN LAYERS NOT LESS THAN 2½" IN DEPTH OR GREATER THAN 4" IN DEPTH.
E1	PROP. APPROX. 4" ASPHALT CONCRETE BASE COURSE, TYPE B25.0B, AT AN AVERAGE RATE OF 456 LBS. PER SQ. YD.
E2	PROP. APPROX. 4.5" ASPHALT CONCRETE BASE COURSE, TYPE B25.0B, AT AN AVERAGE RATE OF 513 LBS. PER SQ. YD.
E3	PROP. APPROX. 5" ASPHALT CONCRETE BASE COURSE, TYPE B25.0B, AT AN AVERAGE RATE OF 570 LBS. PER SQ. YD.
E4	PROP. APPROX. 5.5" ASPHALT CONCRETE BASE COURSE, TYPE B25.0B, AT AN AVERAGE RATE OF 627 LBS. PER SQ. YD.
E5	PROP. VAR. DEPTH ASPHALT CONCRETE BASE COURSE, TYPE B25.0B, AT AN AVERAGE RATE OF 114 LBS. PER SQ. YD. PER 1" DEPTH, TO BE PLACED IN LAYERS NOT GREATER THAN 5½" IN DEPTH OR LESS THAN 3" IN DEPTH.
J1	PROP. 6" AGGREGATE BASE COURSE.
J2	PROP. 10" AGGREGATE BASE COURSE.
J3	PROP. VAR. DEPTH AGGREGATE BASE COURSE.
R1	2'-6" CONCRETE CURB AND GUTTER.
R2	2'-9" CONCRETE CURB AND GUTTER.
R3	5" MONOLITHIC CONCRETE ISLAND (KEYED IN).
R4	CONCRETE EXPRESSWAY GUTTER.
T	EARTH MATERIAL.
U	EXISTING PAVEMENT.
W	VAR. DEPTH ASPHALT PAVEMENT (SEE STANDARD WEDGING DETAIL).

NOTE: PAVEMENT EDGE SLOPES ARE 1:1 UNLESS SHOWN OTHERWISE.

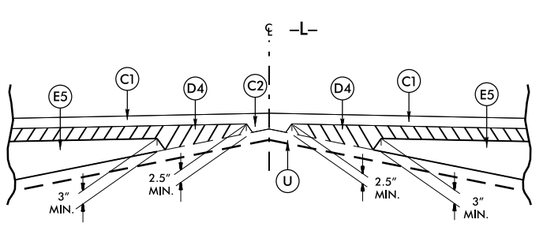

Detail Showing Method of Wedging

PROJECT REFERENCE NO.	SHEET NO.
R-2915D	2
ROADWAY DESIGN ENGINEER	PAVEMENT DESIGN ENGINEER

PRELIMINARY PLANS
DO NOT USE FOR CONSTRUCTION

KCI
Engineers • Planners • Scientists • Construction Managers
4601 Six Forks Road, Landmark Center II, Suite 220
Raleigh, NC 27609-5210
http://www.kci.com
Phone (919) 783-9214 • Fax (919) 783-9266

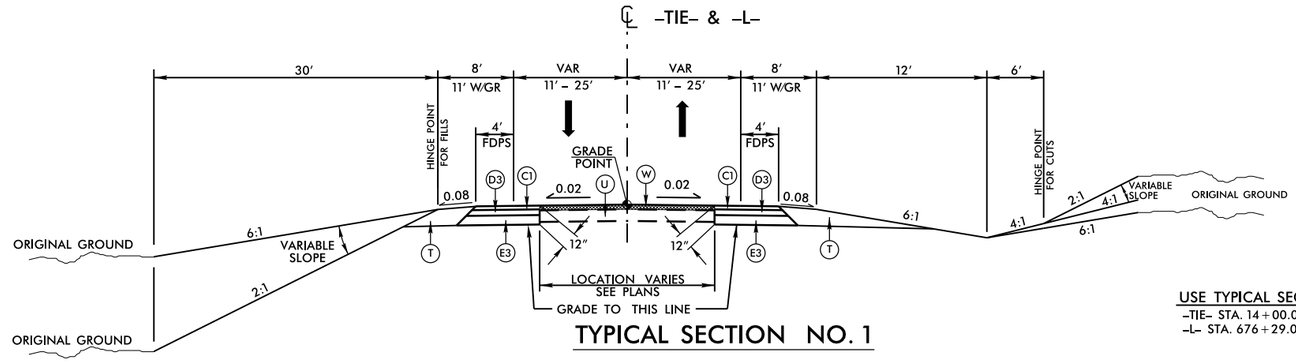

TYPICAL SECTION NO. 1

USE TYPICAL SECTION NO. 1 AS FOLLOWS:
–TIE– STA. 14+00.00 TO –TIE– STA. 17+91.00
–L– STA. 676+29.00 TO –L– STA. 679+90.00

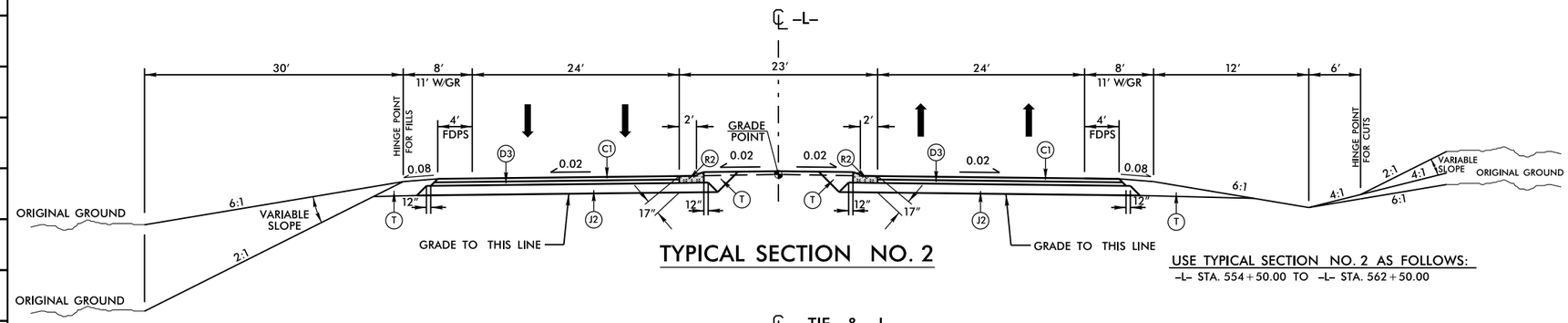

TYPICAL SECTION NO. 2

USE TYPICAL SECTION NO. 2 AS FOLLOWS:
–L– STA. 554+50.00 TO –L– STA. 562+50.00

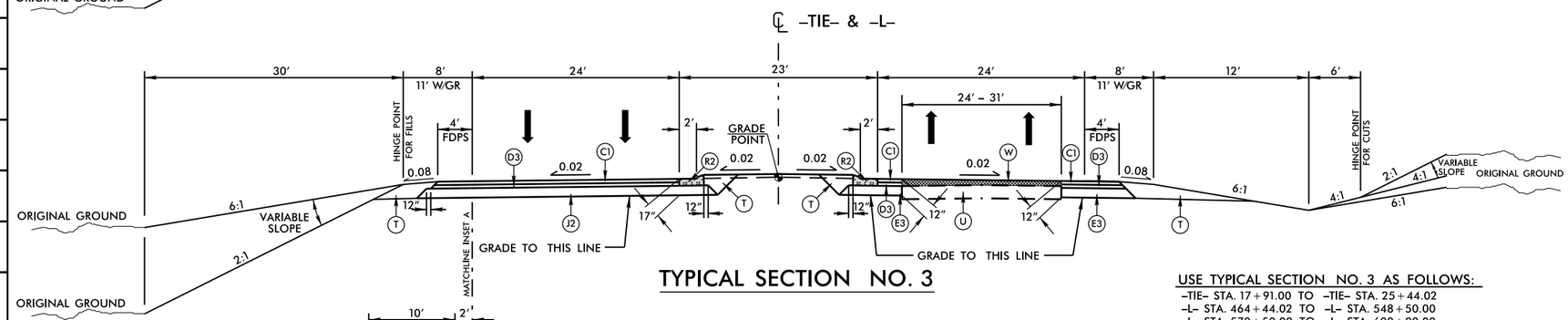

TYPICAL SECTION NO. 3

USE TYPICAL SECTION NO. 3 AS FOLLOWS:
–TIE– STA. 17+91.00 TO –TIE– STA. 25+44.02
–L– STA. 464+44.02 TO –L– STA. 548+50.00
–L– STA. 570+50.00 TO –L– STA. 600+00.00

USE REVERSE OF TYPICAL SECTION NO. 3 AS FOLLOWS:
–L– STA. 548+50.00 TO –L– STA. 554+50.00
–L– STA. 562+50.00 TO –L– STA. 570+50.00
–L– STA. 600+00.00 TO –L– STA. 660+09.00
–L– STA. 666+68.00 TO –L– STA. 676+29.00

USE INSET A AS FOLLOWS:
–L– STA. 514+00.00 LT TO –L– STA. 516+00.00 LT

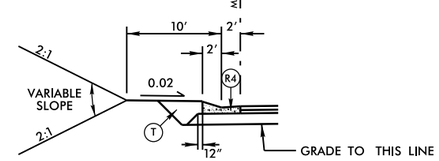

INSET A

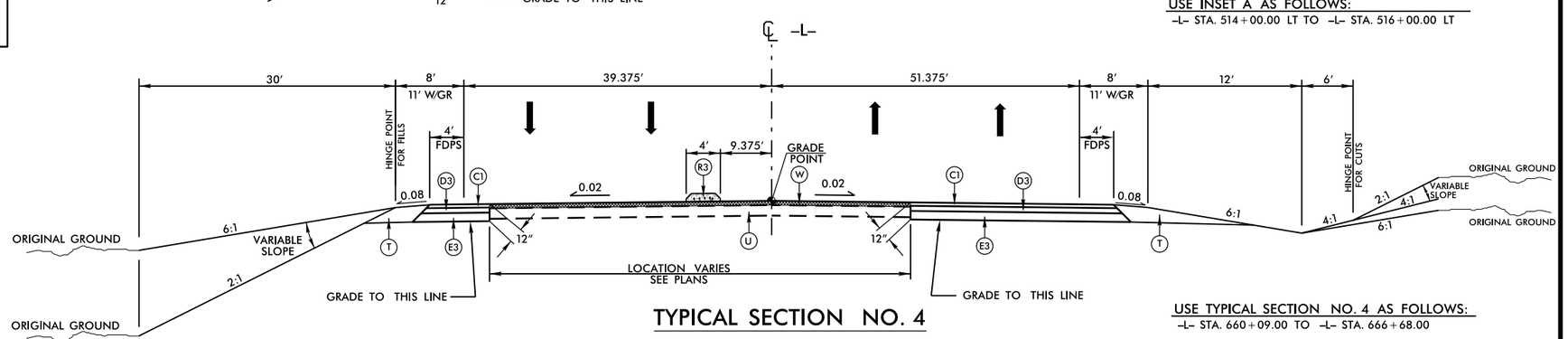

TYPICAL SECTION NO. 4

USE TYPICAL SECTION NO. 4 AS FOLLOWS:
–L– STA. 660+09.00 TO –L– STA. 666+68.00

21-JAN-2014 09:38
R:\Roadway\Proj\R2915D_Rdy_typ.dgn
$$$$USERNAME$$$$

6/2/99

PAVEMENT SCHEDULE PREL.PAVEMENT DESIGN	
C1	3″ S9.5B
C2	VAR. S9.5B
D1	2.5″ I19.0B
D2	3″ I19.0B
D3	4″ I19.0B
D4	VAR. I19.0B
E1	4″ B25.0B
E2	4.5″ B25.0B
E3	5″ B25.0B
E4	5.5″ B25.0B
E5	VAR. B25.0B
J1	6″ ABC
J2	10″ ABC
J3	VAR. ABC
R1	2′-6″ C & G
R2	2′-9″ C & G
R3	5″ MONO. ISLAND
R4	EXPR. GUTTER
T	EARTH MATERIAL
U	EXIST. PAVEMENT
W	WEDGING

PROJECT REFERENCE NO.	SHEET NO.
R-2915D	2-A
ROADWAY DESIGN ENGINEER	PAVEMENT DESIGN ENGINEER

PRELIMINARY PLANS
DO NOT USE FOR CONSTRUCTION

KCI
Engineers • Planners • Scientists • Construction Managers
4601 Six Forks Road, Landmark Center II, Suite 220
Raleigh, NC 27609-5210
http://www.kci.com
Phone (919) 783-9214 • Fax (919) 783-9266

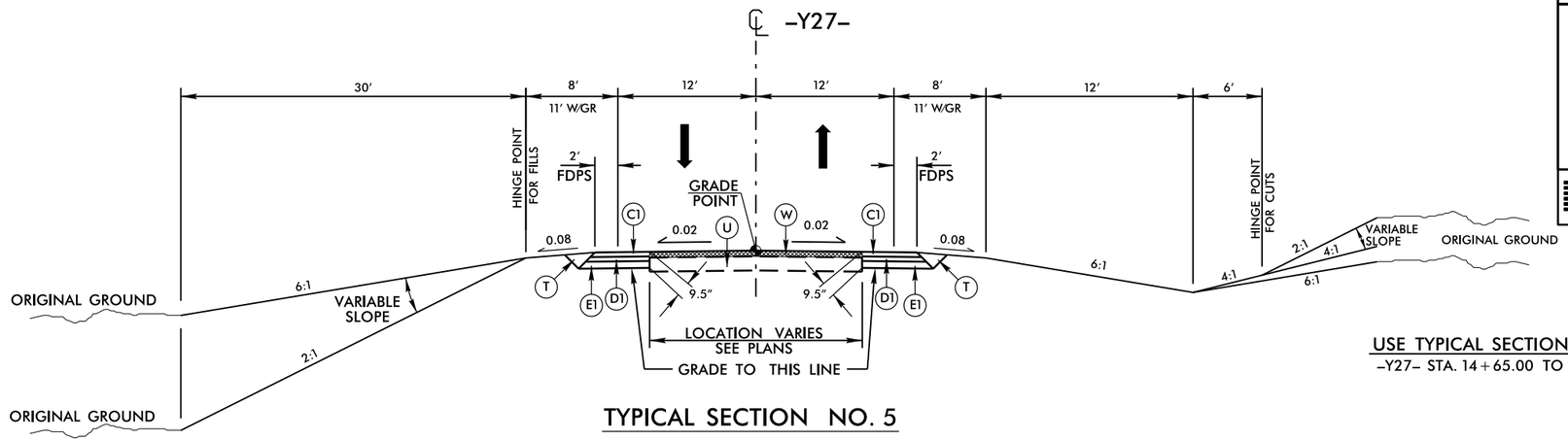

TYPICAL SECTION NO. 5

USE TYPICAL SECTION NO. 5 AS FOLLOWS:
–Y27– STA. 14+65.00 TO –Y27– STA. 15+60.00

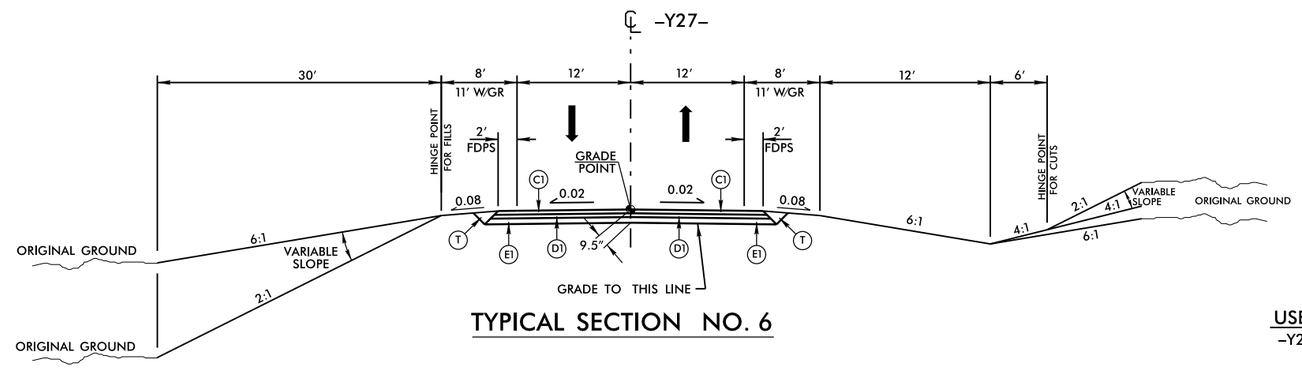

TYPICAL SECTION NO. 6

USE TYPICAL SECTION NO. 6 AS FOLLOWS:
–Y27– STA. 15+60.00 TO –Y27– STA. 18+53.39

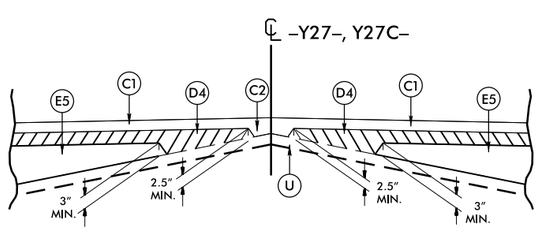

Detail Showing Method of Wedging

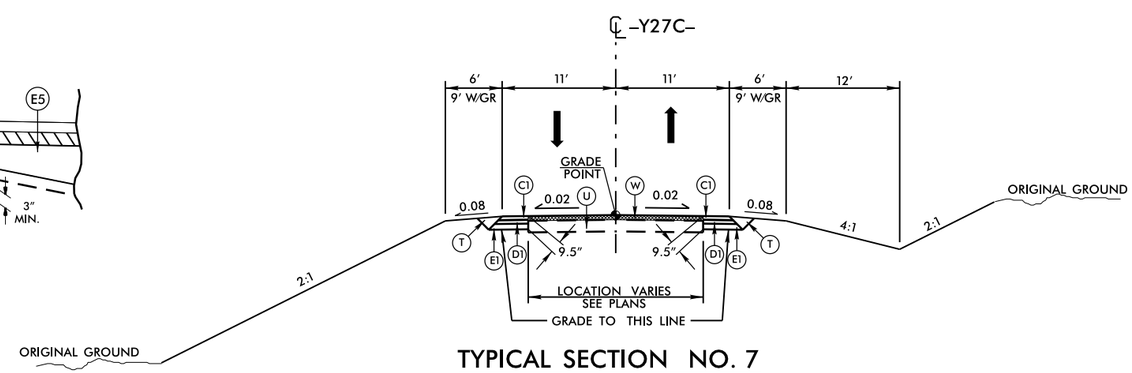

TYPICAL SECTION NO. 7

USE TYPICAL SECTION NO. 7 AS FOLLOWS:
–Y27C– STA. 10+36.83 TO –Y27C– STA. 12+00.00

21-JAN-2014 09:38
R:\Roadway\Proj\R2915D_Rdy_typ.dgn
$$$$USERNAME$$$$

6/2/99

PAVEMENT SCHEDULE PREL.PAVEMENT DESIGN	
C1	3″ S9.5B
C2	VAR. S9.5B
D1	2.5″ I19.0B
D2	3″ I19.0B
D3	4″ I19.0B
D4	VAR. I19.0B
E1	4″ B25.0B
E2	4.5″ B25.0B
E3	5″ B25.0B
E4	5.5″ B25.0B
E5	VAR. B25.0B
J1	6″ ABC
J2	10″ ABC
J3	VAR. ABC
R1	2′-6″ C & G
R2	2′-9″ C & G
R3	5″ MONO. ISLAND
R4	EXPR. GUTTER
T	EARTH MATERIAL
U	EXIST. PAVEMENT
W	WEDGING

PROJECT REFERENCE NO.	SHEET NO.
R-2915D	2-B
ROADWAY DESIGN ENGINEER	PAVEMENT DESIGN ENGINEER

PRELIMINARY PLANS
DO NOT USE FOR CONSTRUCTION

KCI
Engineers • Planners • Scientists • Construction Managers
4601 Six Forks Road, Landmark Center II, Suite 220
Raleigh, NC 27609-5210
http://www.kci.com
Phone (919) 783-9214 • Fax (919) 783-9266

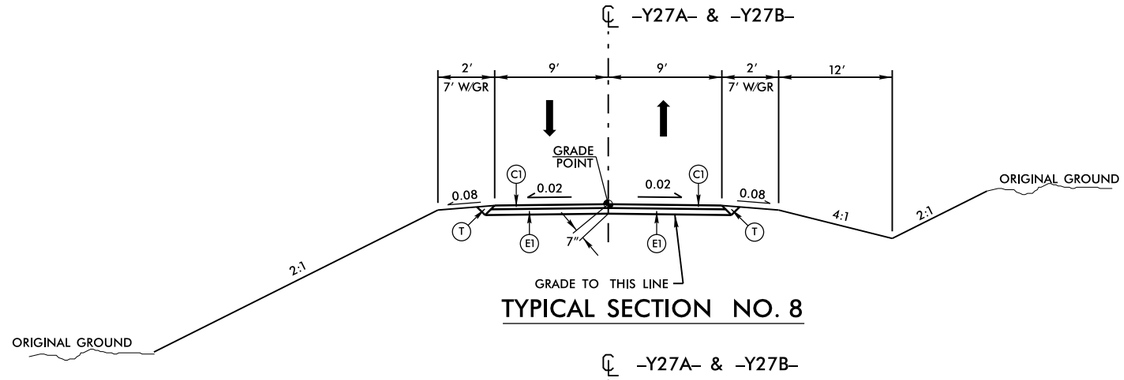

TYPICAL SECTION NO. 8

USE TYPICAL SECTION NO. 8 AS FOLLOWS:
–Y27A– STA. 10+12.00 TO –Y27A– STA. 11+25.00
–Y27B– STA. 11+45.00 TO –Y27B– STA. 12+83.78

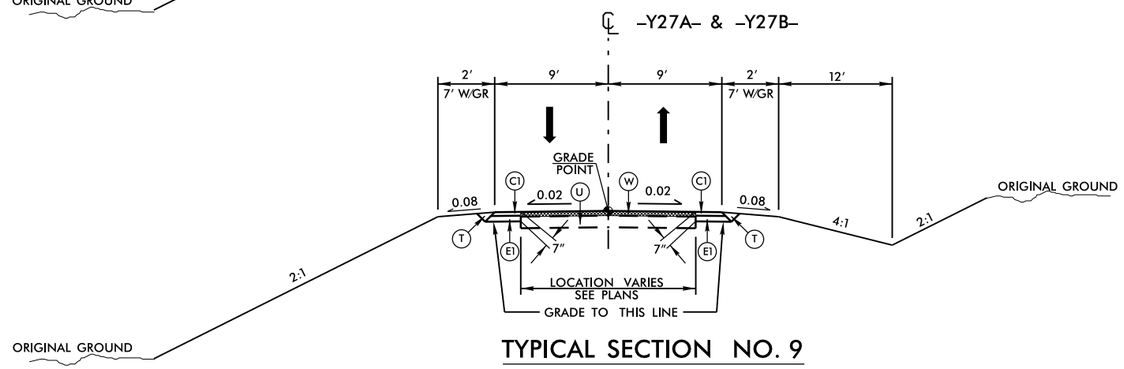

TYPICAL SECTION NO. 9

USE TYPICAL SECTION NO. 9 AS FOLLOWS:
–Y27A– STA. 11+25.00 TO –Y27A– STA. 11+70.00
–Y27B– STA. 10+90.00 TO –Y27B– STA. 11+45.00

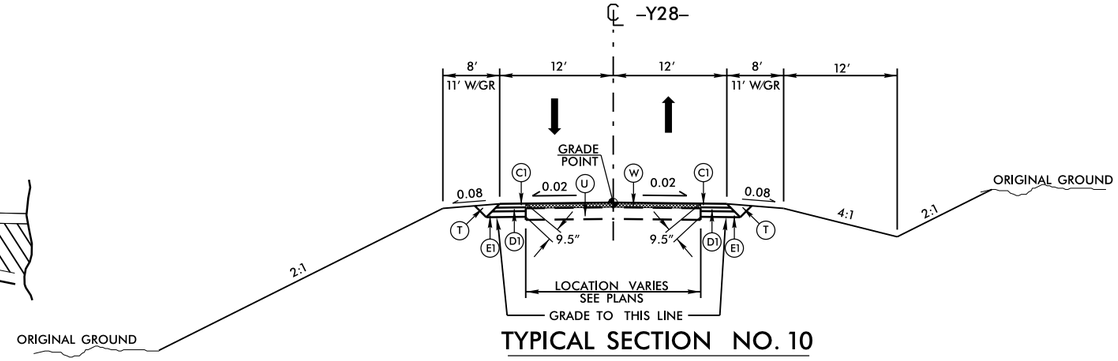

TYPICAL SECTION NO. 10

USE TYPICAL SECTION NO. 10 AS FOLLOWS:
–Y28– STA. 16+15.00 TO –Y28– STA. 17+08.00

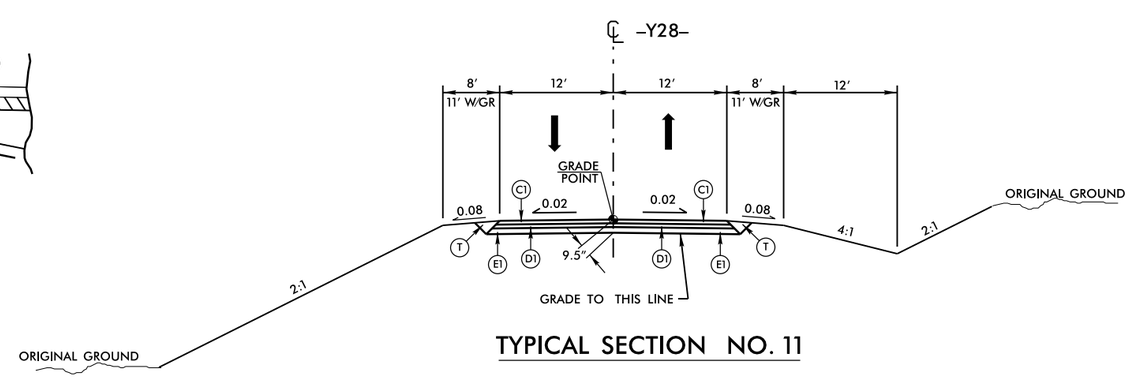

TYPICAL SECTION NO. 11

USE TYPICAL SECTION NO. 11 AS FOLLOWS:
–Y28– STA. 17+08.00 TO –Y28– STA. 17+82.70

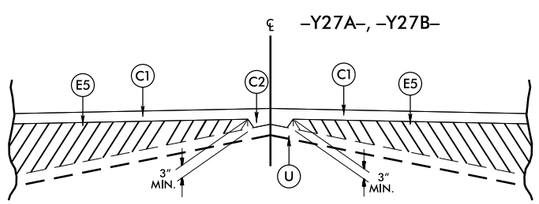

Detail Showing Method of Wedging

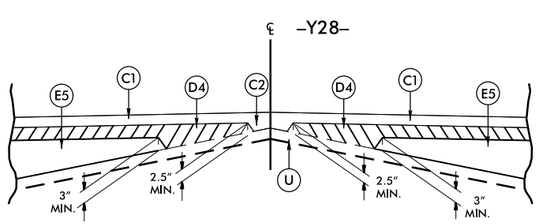

Detail Showing Method of Wedging

21-JAN-2014 09:38
R:\Roadway\Proj\R2915D_Rdy_typ.dgn
$$$$USERNAME$$$$

6/2/99

PAVEMENT SCHEDULE PREL.PAVEMENT DESIGN	
C1	3″ S9.5B
C2	VAR. S9.5B
D1	2.5″ I19.0B
D2	3″ I19.0B
D3	4″ I19.0B
D4	VAR. I19.0B
E1	4″ B25.0B
E2	4.5″ B25.0B
E3	5″ B25.0B
E4	5.5″ B25.0B
E5	VAR. B25.0B
J1	6″ ABC
J2	10″ ABC
J3	VAR. ABC
R1	2′-6″ C & G
R2	2′-9″ C & G
R3	5″ MONO. ISLAND
R4	EXPR. GUTTER
T	EARTH MATERIAL
U	EXIST. PAVEMENT
W	WEDGING

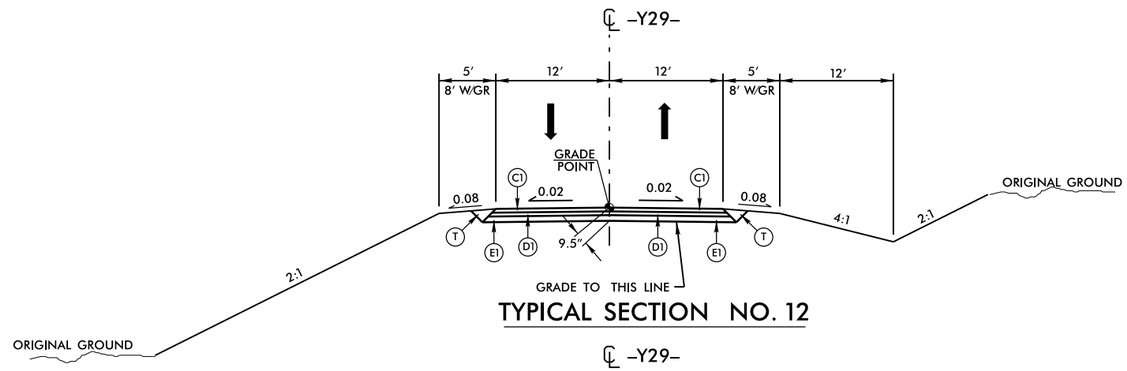

TYPICAL SECTION NO. 12

USE TYPICAL SECTION NO. 12 AS FOLLOWS:
–Y29– STA. 10+36.03 TO –Y29– STA. 11+32.00

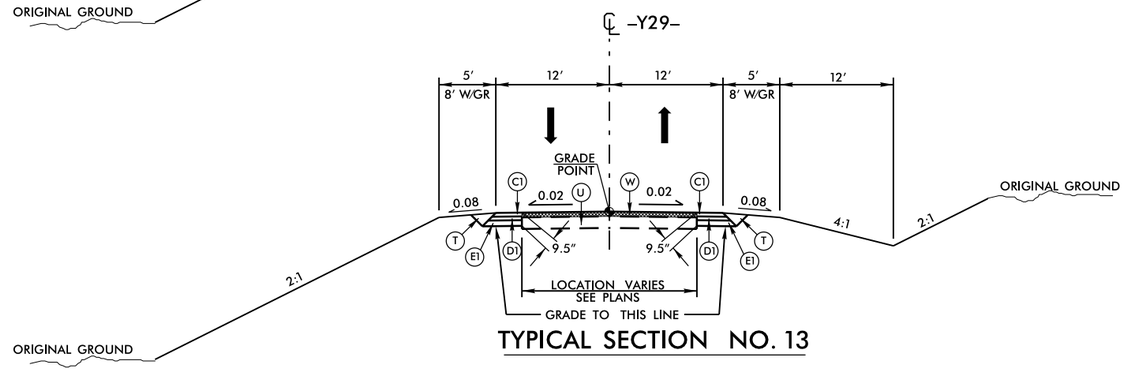

TYPICAL SECTION NO. 13

USE TYPICAL SECTION NO. 13 AS FOLLOWS:
–Y29– STA. 11+32.00 TO –Y29– STA. 12+60.00

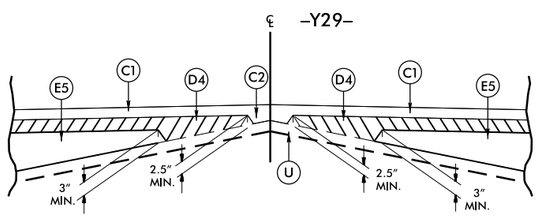

Detail Showing Method of Wedging

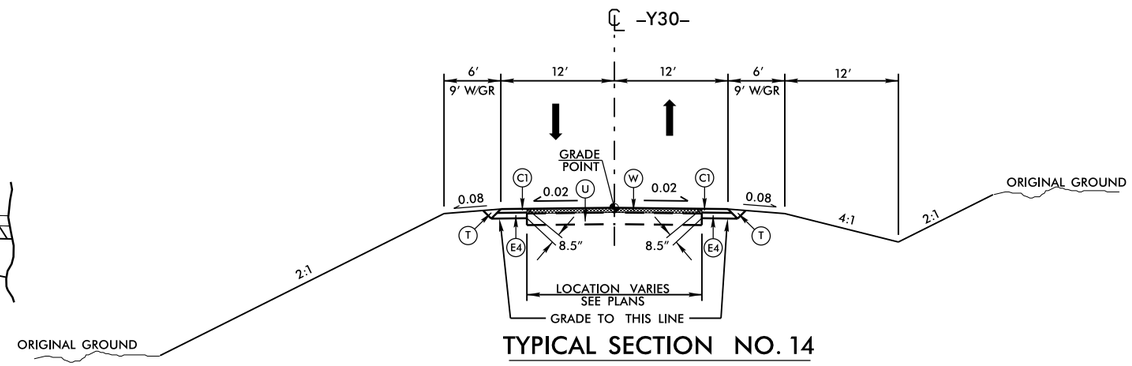

TYPICAL SECTION NO. 14

USE TYPICAL SECTION NO. 14 AS FOLLOWS:
–Y30– STA. 10+35.51 TO –Y30– STA. 11+00.00

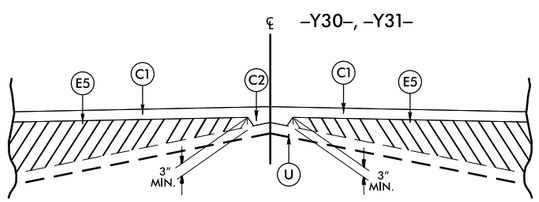

Detail Showing Method of Wedging

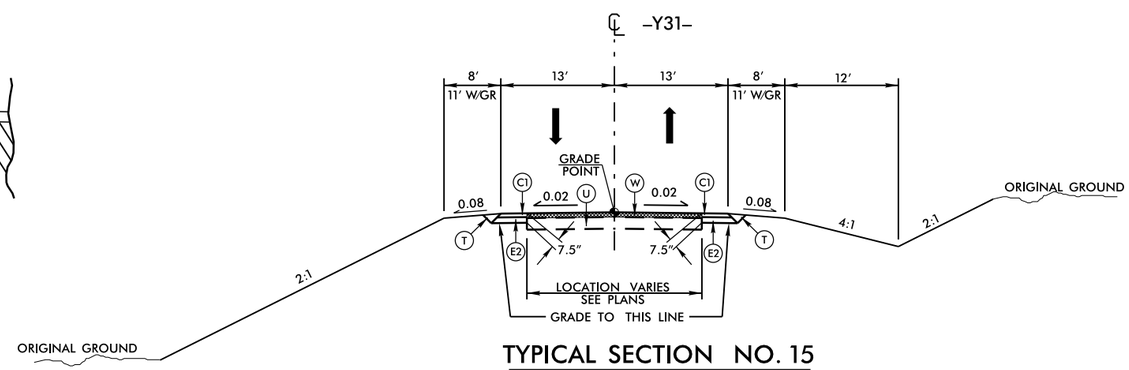

TYPICAL SECTION NO. 15

USE TYPICAL SECTION NO. 15 AS FOLLOWS:
–Y31– STA. 10+35.98 TO –Y31– STA. 11+65.00

PROJECT REFERENCE NO.	SHEET NO.
R-2915D	2-C
ROADWAY DESIGN ENGINEER	PAVEMENT DESIGN ENGINEER

PRELIMINARY PLANS
DO NOT USE FOR CONSTRUCTION

KCI
Engineers • Planners • Scientists • Construction Managers
4601 Six Forks Road, Landmark Center II, Suite 220
Raleigh, NC 27609-5210
http://www.kci.com
Phone (919) 783-9214 • Fax (919) 783-9266

21-JAN-2014 09:38
R:\Roadway\Proj\R2915D_Rdy_typ.dgn
$$$$USERNAME$$$$

6/2/99

PAVEMENT SCHEDULE PREL.PAVEMENT DESIGN	
C1	3″ S9.5B
C2	VAR. S9.5B
D1	2.5″ I19.0B
D2	3″ I19.0B
D3	4″ I19.0B
D4	VAR. I19.0B
E1	4″ B25.0B
E2	4.5″ B25.0B
E3	5″ B25.0B
E4	5.5″ B25.0B
E5	VAR. B25.0B
J1	6″ ABC
J2	10″ ABC
J3	VAR. ABC
R1	2′-6″ C & G
R2	2′-9″ C & G
R3	5″ MONO. ISLAND
R4	EXPR. GUTTER
T	EARTH MATERIAL
U	EXIST. PAVEMENT
W	WEDGING

PROJECT REFERENCE NO.	SHEET NO.
R-2915D	2-D
ROADWAY DESIGN ENGINEER	PAVEMENT DESIGN ENGINEER

PRELIMINARY PLANS
DO NOT USE FOR CONSTRUCTION

KCI
Engineers • Planners • Scientists • Construction Managers
4601 Six Forks Road, Landmark Center II, Suite 220
Raleigh, NC 27609-5210
http://www.kci.com
Phone (919) 783-9214 • Fax (919) 783-9266

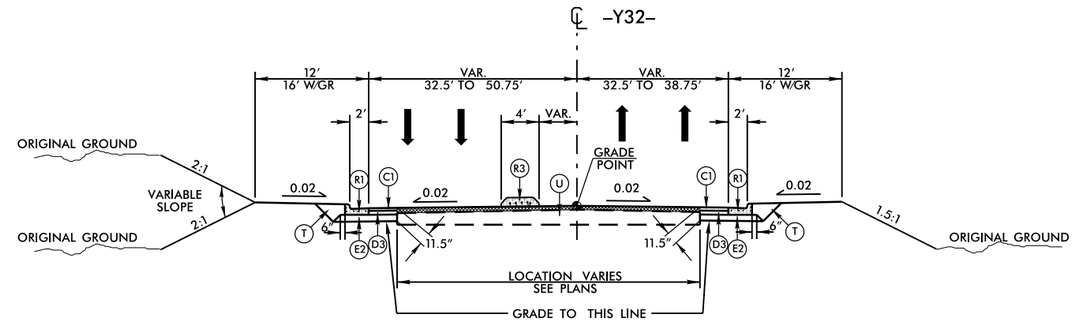

TYPICAL SECTION NO. 16

USE TYPICAL SECTION NO. 16 AS FOLLOWS:
–Y32– STA. 16+30.00 TO –Y32– STA. 21+46.70

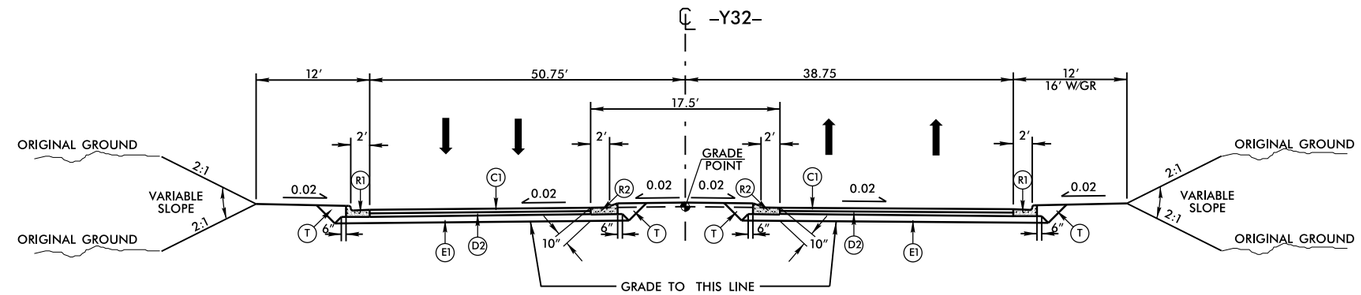

TYPICAL SECTION NO. 17

USE TYPICAL SECTION NO. 17 AS FOLLOWS:
–Y32– STA. 22+52.07 TO –Y32– STA. 25+00.00

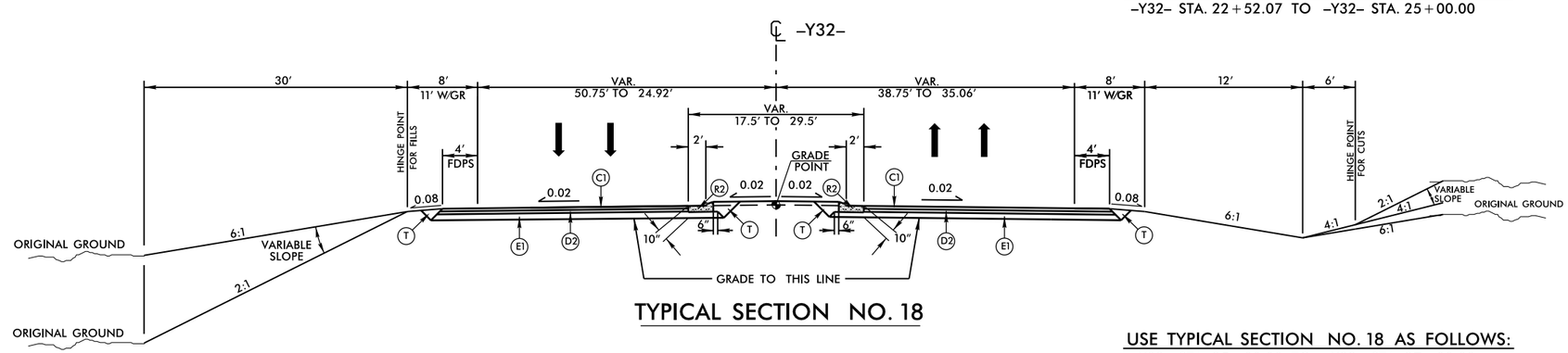

TYPICAL SECTION NO. 18

USE TYPICAL SECTION NO. 18 AS FOLLOWS:
–Y32– STA. 25+00.00 TO –Y32– STA. 27+00.00

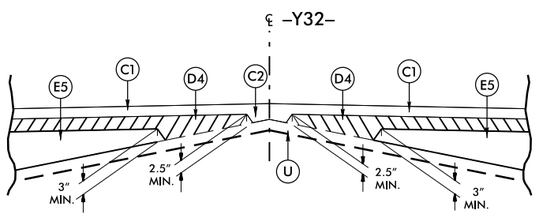

Detail Showing Method of Wedging

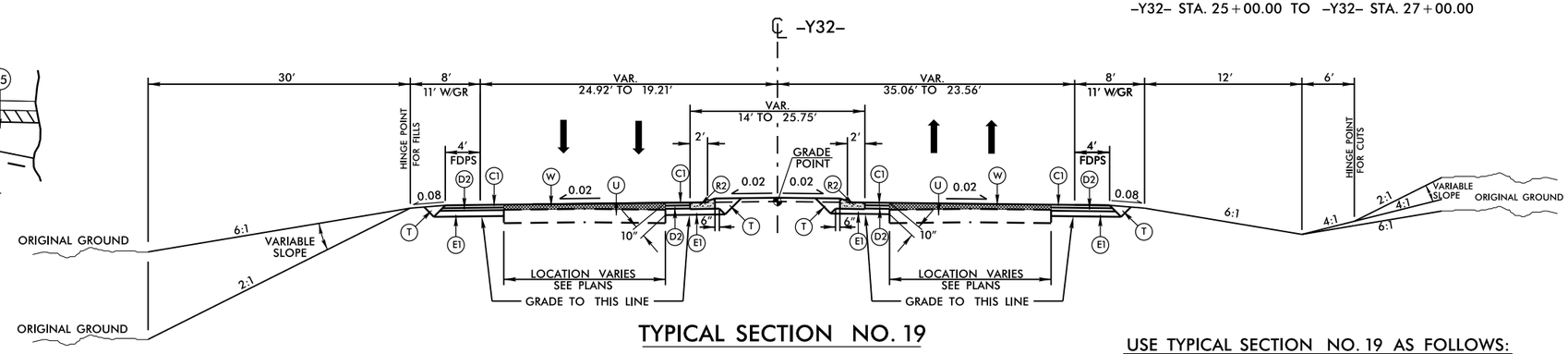

TYPICAL SECTION NO. 19

USE TYPICAL SECTION NO. 19 AS FOLLOWS:
–Y32– STA. 27+00.00 TO –Y32– STA. 28+56.00

21-JAN-2014 09:38
R:\Roadway\Proj\R2915D_Rdy_typ.dgn
$$$$USERNAME$$$$

6/2/99

PAVEMENT SCHEDULE PRELIMINARY PAVEMENT DESIGN	
C1	3″ S9.5B
C2	VAR. S9.5B
D1	2.5″ I19.0B
D2	3″ I19.0B
D3	4″ I19.0B
D4	VAR. I19.0B
E1	4″ B25.0B
E2	4.5″ B25.0B
E3	5″ B25.0B
E4	5.5″ B25.0B
E5	VAR. B25.0B
J1	6″ ABC
J2	10″ ABC
J3	VAR. ABC
R1	2′-6″ C & G
R2	2′-9″ C & G
R3	5″ MONO. ISLAND
R4	EXPR. GUTTER
T	EARTH MATERIAL
U	EXIST. PAVEMENT
W	WEDGING

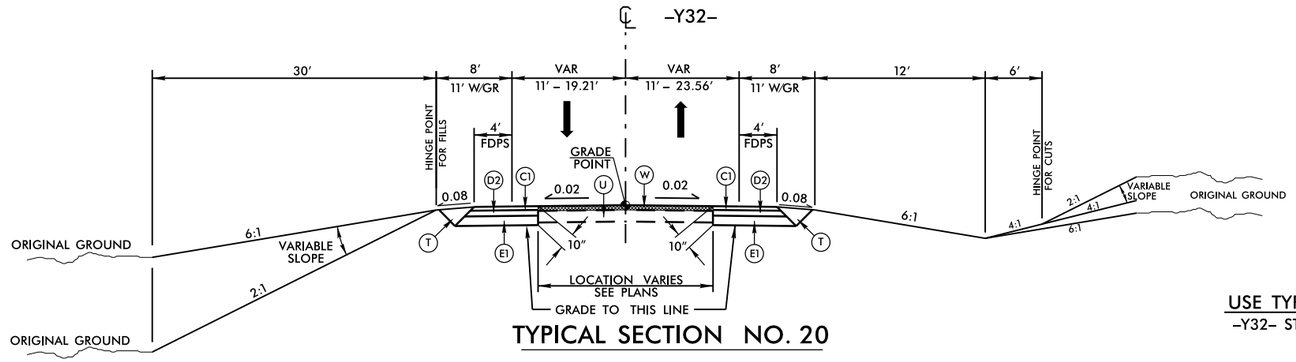

TYPICAL SECTION NO. 20

USE TYPICAL SECTION NO. 20 AS FOLLOWS:
–Y32– STA. 28+56.00 TO –Y32– STA. 29+90.00

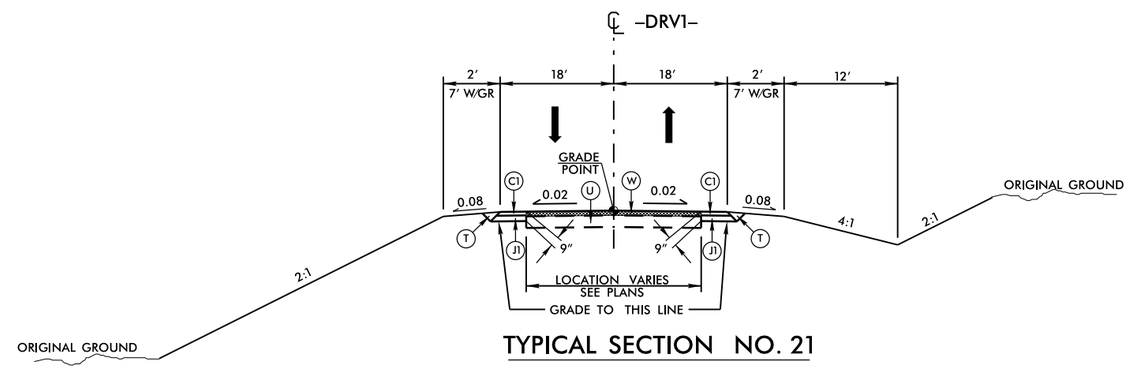

TYPICAL SECTION NO. 21

USE TYPICAL SECTION NO. 21 AS FOLLOWS:
–DRV1– STA. 10+47.50 TO –DRV1– STA. 11+80.00

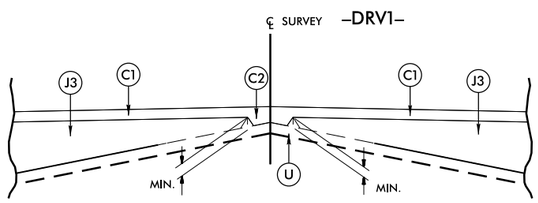

Detail Showing Method of Wedging

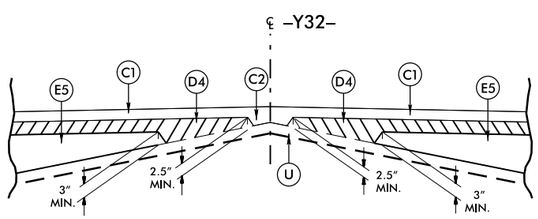

Detail Showing Method of Wedging

PROJECT REFERENCE NO.	SHEET NO.
R-2915D	2-E
ROADWAY DESIGN ENGINEER	PAVEMENT DESIGN ENGINEER

PRELIMINARY PLANS
DO NOT USE FOR CONSTRUCTION

KCI
Engineers • Planners • Scientists • Construction Managers
4601 Six Forks Road, Landmark Center II, Suite 220
Raleigh, NC 27609-5210
http://www.kci.com
Phone (919) 783-9214 • Fax (919) 783-9266

21-JAN-2014 09:38
R:\Roadway\Proj\R2915D_Rdy_typ.dgn
$$$$USERNAME$$$$

PROJECT REFERENCE NO.	SHEET NO.
R-2915D	4
R/W SHEET NO.	
ROADWAY DESIGN ENGINEER	HYDRAULICS ENGINEER

PRELIMINARY PLANS
DO NOT USE FOR CONSTRUCTION

KCI
Engineers • Planners • Scientists • Construction Managers
4601 Six Forks Road, Landmark Center II, Suite 220
Raleigh, NC 27609-5210
Phone (919) 783-9214 • Fax (919) 783-9266

SUNGATE DESIGN GROUP, P.A.
915 JONES FRANKLIN ROAD
RALEIGH, NORTH CAROLINA 27606
TEL (919) 859-2243 FAX (919) 859-6258
ENG FIRM LICENSE NO. C-890

REVISIONS

02/25/14 – R/W REVISIONS: UPDATED EXISTING R/W AND PROPERTY LINE ON PARCELS 3 AND 5, REVISED TCE FROM –L– STA. 458+50.00 TO STA. 459+27.60 LT ON PARCEL 3, REMOVED TCE ON PARCEL 5, ADDED PROPOSED R/W FROM –L– STA. 452+95.00 TO STA. 452+95.00 RT. ON PARCEL 4, ADDED TCE ON PARCEL 5 – PJS

08/29/14 – R/W REVISIONS: PROVIDED AN ACCESS POINT FROM –L– STA. 454+00.00 TO STA. 455+47.64 TO STA. 456+07.64 RT. ON PARCEL 4; PROVIDED AN ACCESS POINT FROM –L– STA. 461+90.00 LT. AND A DRIVEWAY AT –L– STA. 461+50.00 LT. ON PARCEL 5. – PJS

11/14/14 – R/W REVISIONS: ADJUSTED STATIONS AND/OR OFFSETS BASED ON THE FIELD STAKING ON PARCELS 1 THROUGH 5. – TEM

8/17/99

13-NOV-2014 11:03

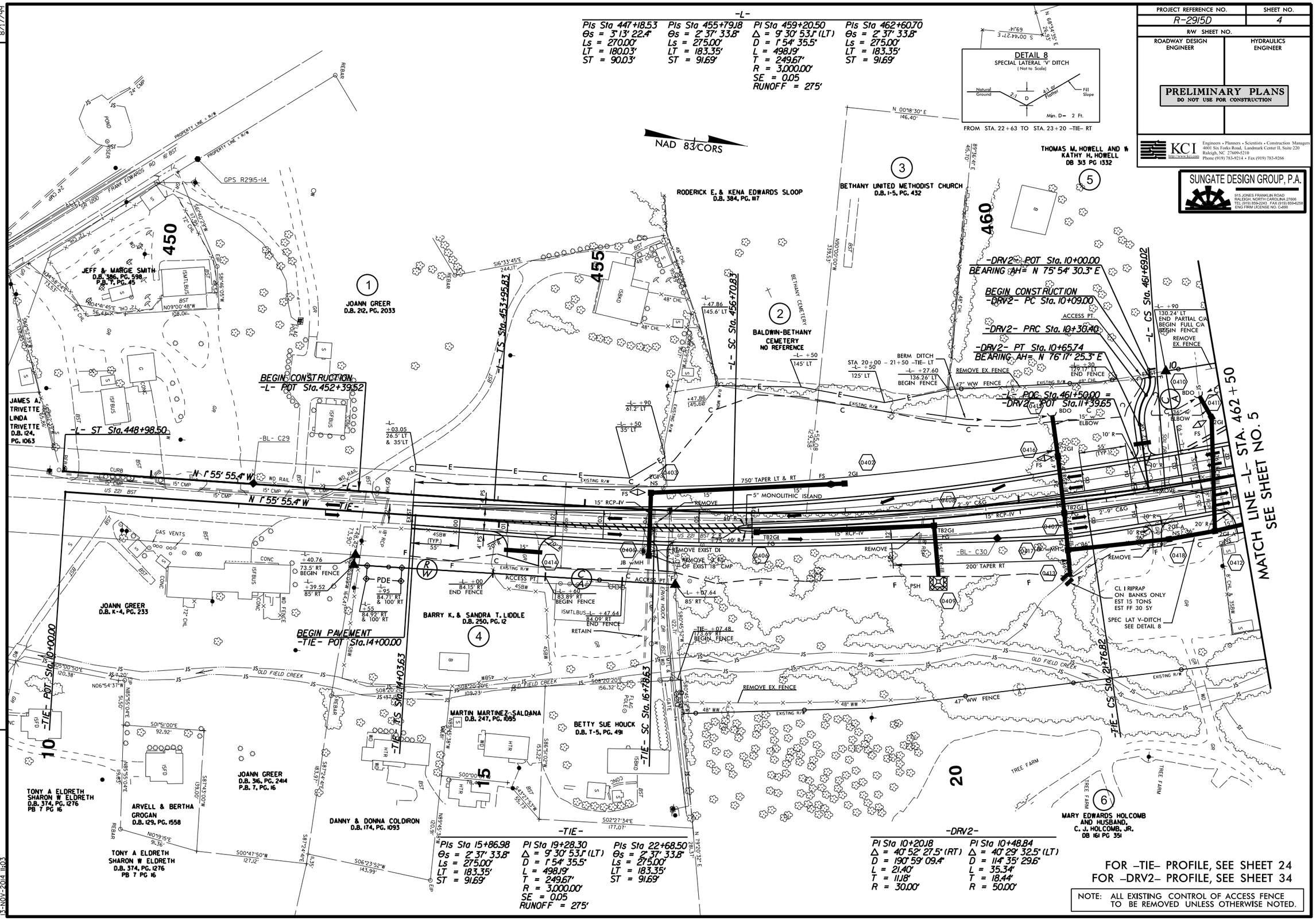

FOR –TIE– PROFILE, SEE SHEET 24
FOR –DRV2– PROFILE, SEE SHEET 34

NOTE: ALL EXISTING CONTROL OF ACCESS FENCE TO BE REMOVED UNLESS OTHERWISE NOTED.

PROJECT REFERENCE NO.	SHEET NO.
R-2915D	5
R/W SHEET NO.	
ROADWAY DESIGN ENGINEER	HYDRAULICS ENGINEER

PRELIMINARY PLANS
DO NOT USE FOR CONSTRUCTION

KCI
Engineers • Planners • Scientists • Construction Managers
4601 Six Forks Road, Landmark Center II, Suite 220
Raleigh, NC 27609-5210
Phone (919) 783-9214 • Fax (919) 783-9266

SUNGATE DESIGN GROUP, P.A.
915 JONES FRANKLIN ROAD
RALEIGH, NORTH CAROLINA 27606
TEL (919) 859-2243 FAX (919) 859-6258
ENG FIRM LICENSE NO. C-850

END TIP PROJECT R-2915C
BEGIN TIP PROJECT R-2915D
-TIE- POT Sta. 25+44.02 =
-L- ST Sta. 464+44.02

NAD 83/CORS

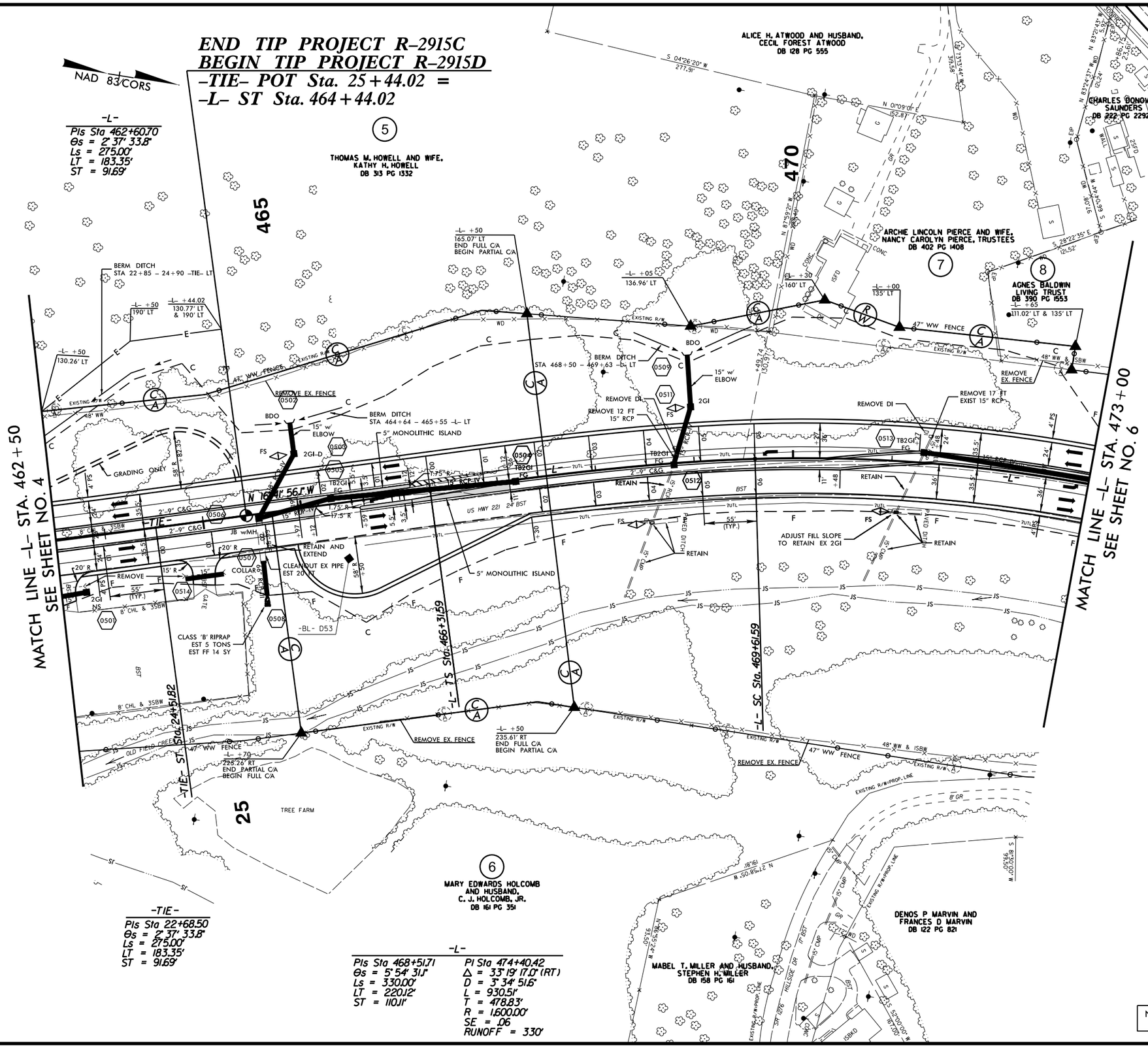

-TIE-
PIs Sta 22+68.50
Θs = 2° 37' 33.8"
Ls = 275.00'
LT = 183.35'
ST = 91.69'

-L-

PIs Sta 468+51.71	PI Sta 474+40.42
Θs = 5° 54' 31.1"	Δ = 33° 19' 17.0" (RT)
Ls = 330.00'	D = 3° 34' 51.6"
LT = 220.12'	L = 930.51'
ST = 110.11'	T = 478.83'
	R = 1,600.00'
	SE = .06
	RUNOFF = 330'

FOR -TIE- PROFILE, SEE SHEET 24
FOR -L- PROFILE, SEE SHEET 24

NOTE: ALL EXISTING CONTROL OF ACCESS FENCE TO BE REMOVED UNLESS OTHERWISE NOTED.

8/17/99

REVISIONS

11/14/14 – R/W REVISIONS; ADJUSTED STATIONS AND/OR OFFSETS BASED ON THE FIELD STAKING ON PARCELS 5, 6, AND 8. – TEM

13-NOV-2014 11:04
R:\Roadway\Proj\R2915D_Rdy_psh_5.dgn
$$$$USERNAME$$$$

PROJECT REFERENCE NO.	SHEET NO.
R-2915D	6
R/W SHEET NO.	
ROADWAY DESIGN ENGINEER	HYDRAULICS ENGINEER

PRELIMINARY PLANS
DO NOT USE FOR CONSTRUCTION

KCI Technologies, Inc.
Engineers • Planners • Scientists • Construction Managers
4601 Six Forks Road, Landmark Center II, Suite 220
Raleigh, NC 27609-5210
Phone (919) 783-9214 • Fax (919) 783-9266

SUNGATE DESIGN GROUP, P.A.
915 JONES FRANKLIN ROAD
RALEIGH, NORTH CAROLINA 27606
TEL (919) 859-2243 FAX (919) 859-9258
ENG FIRM LICENSE NO. C-890

NAD 83/CORS

8/17/99

REVISIONS

02/25/14 – R/W REVISIONS: UPDATED PROPERTY OWNER NAME AND DEED REFERENCE ON PARCEL 10. – PJS
11/14/14 – R/W REVISIONS: ADJUSTED STATIONS AND/OR OFFSETS BASED ON THE FIELD STAKING ON PARCELS 9 THROUGH 11. – TEM

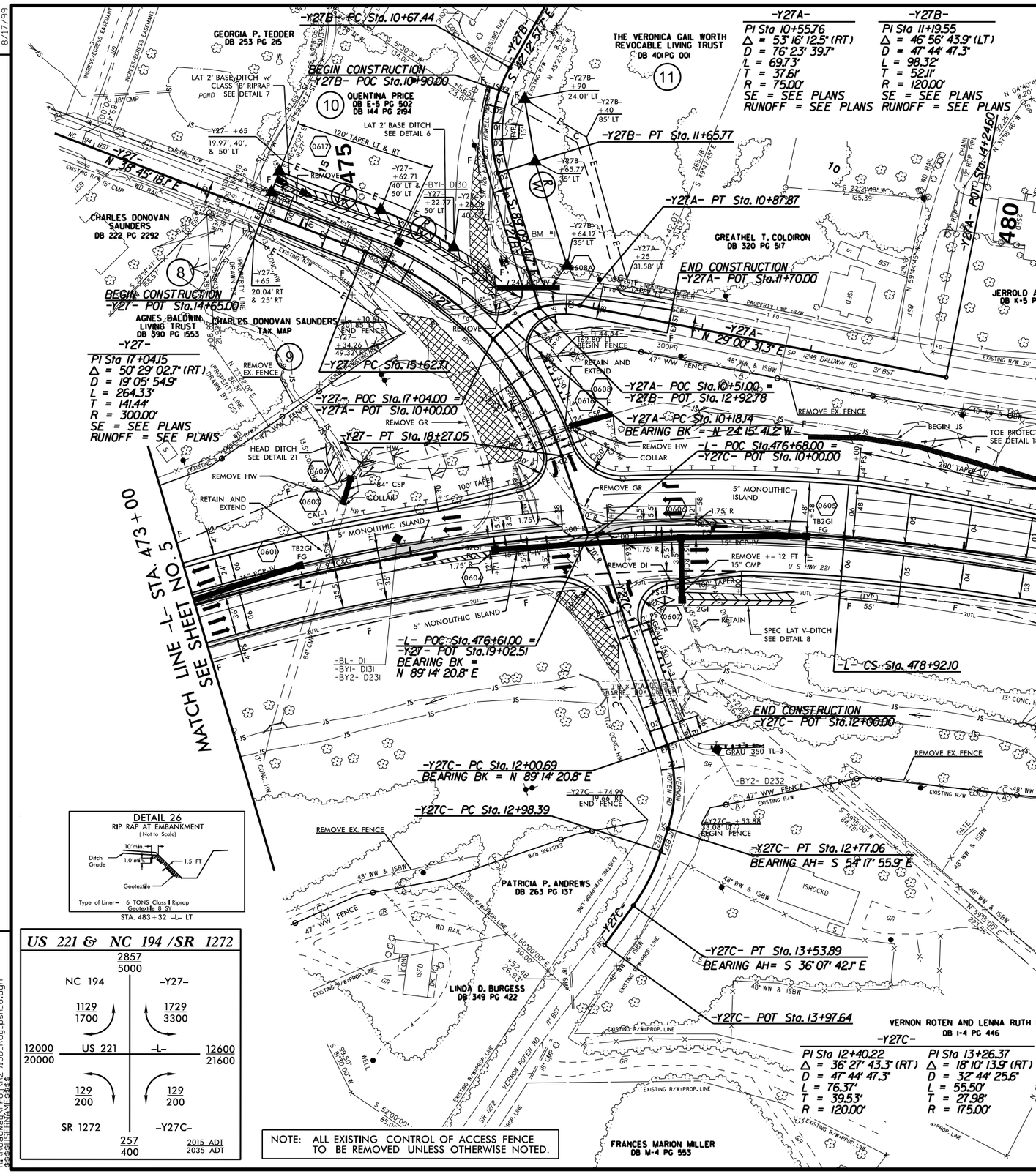

DETAIL 21
STANDARD BASE DITCH
(Not to Scale)

Natural Ground, 2:1, d, D, B, 2:1, Natural Ground
Min. D= Ft.
Max. d= Ft.
B= Ft.
*When B is < 6.0'
Type of Liner= Coir Fiber Matting "On Banks Only"
FROM STA. 474+43 TO STA. 474+69 –L– LT
DDE = 16 CY

DETAIL 1
TOE PROTECTION
(Not to Scale)

Natural Ground, b, 2:1 or Flatter, Fill Slope, d, Geotextile
d=2 Ft.
b=3 Ft.
Type of Liner= CLASS I Rip-Rap
FROM STA. 480+20 TO STA. 481+40 –L– LT

DETAIL 6
LATERAL BASE DITCH
(Not to Scale)

Natural Ground, 2:1, D, 2:1, b, 1'Ft., Fill Slope, B
Min. D=2 Ft.
B=2 Ft.
b=5 Ft.
Type of Liner= Class 'B' Rip-Rap
FROM STA. 15+00 TO STA. 16+75 –Y27– LT
DDE = 174 CY

DETAIL 7
LATERAL BASE DITCH
(Not to Scale)

Natural Ground, 2:1, D, 2:1, b, 1'Ft., Fill Slope, Geotextile, B
Min. D= 2 Ft.
Max. d= 2 Ft.
B= 2 Ft.
b= 5 Ft.
*When B is < 6.0'
Type of Liner= Class 'B' Rip-Rap
FROM STA. 14+65 TO STA. 15+00 –Y27– LT
DDE = 19 CY

DETAIL 26
RIP RAP AT EMBANKMENT
(Not to Scale)

10'min, 1.0'min, Ditch Grade, 1.5 FT, Geotextile
Type of Liner= 6 TONS Class I Riprap
Geotextile 8 SY
STA. 483+32 –L– LT

DETAIL 8
SPECIAL LATERAL 'V' DITCH
(Not to Scale)

Natural Ground, 2:1, D, 4:1 or Flatter, Fill Slope
Min. D= 2 Ft.
FROM STA. 477+50 TO STA. 478+50 –L– RT

DETAIL 18
TOE PROTECTION
(Not to Scale)

Natural Ground, 2:1 or Flatter, Fill Slope, d, Geotextile
d=2 Ft.
Type of Liner= CLASS I Rip-Rap
FROM STA. 478+80 TO STA. 480+20 –L– LT

DETAIL 9
LATERAL 'V' DITCH
(Not to Scale)

Natural Ground, 2:1, d, D, 2:1, b, 1'Ft., Fill Slope, Geotextile
Min. D= 2 Ft.
Max. d= 2 Ft.
b= 5 Ft.
Type of Liner= CLASS I Rip-Rap
FROM STA. 483+34 TO STA. 483+76 –L– LT
DDE = 17 CY

US 221 & NC 194 /SR 1272

	2857 / 5000	
NC 194		–Y27–
1129 / 1700		1729 / 3300
12000 / 20000	US 221 –L–	12600 / 21600
129 / 200		129 / 200
SR 1272		–Y27C–
	257 / 400	2015 ADT / 2035 ADT

NOTE: ALL EXISTING CONTROL OF ACCESS FENCE TO BE REMOVED UNLESS OTHERWISE NOTED.

–Y27A–

PI Sta 10+55.76
Δ = 53°16'12.5" (RT)
D = 76°23'39.7"
L = 69.73'
T = 37.61'
R = 75.00'
SE = SEE PLANS
RUNOFF = SEE PLANS

–Y27B–

PI Sta 11+19.55
Δ = 46°56'43.9" (LT)
D = 47°44'47.3"
L = 98.32'
T = 52.11'
R = 120.00'
SE = SEE PLANS
RUNOFF = SEE PLANS

–Y27C–

PI Sta 12+40.22
Δ = 36°27'43.3" (RT)
D = 47°44'47.3"
L = 76.37'
T = 39.53'
R = 120.00'

PI Sta 13+26.37
Δ = 18°10'13.9" (RT)
D = 32°44'25.6"
L = 55.50'
T = 27.98'
R = 175.00'

–L–

PI Sta 474+40.42
Δ = 33°19'17.0" (RT)
D = 3°34'51.6"
L = 930.51'
T = 478.83'
R = 1,600.00'
SE = .06
RUNOFF = 330'

PIs Sta 480+02.21
Θs = 5°54'31.1"
Ls = 330.00'
LT = 220.12'
ST = 110.11'

FOR –L– PROFILE, SEE SHEET 25
FOR –Y27– PROFILE, SEE SHEET 33
FOR –Y27A– PROFILE, SEE SHEET 34
FOR –Y27B– PROFILE, SEE SHEET 34
FOR –Y27C– PROFILE, SEE SHEET 33

13-NOV-2014 11:04
R:\Roadway\Proj\R2915D_Rdy_psh_6.dgn
$$$$USERNAME$$$$

PROJECT REFERENCE NO.	SHEET NO.
R-2915D	7
R/W SHEET NO.	
ROADWAY DESIGN ENGINEER	HYDRAULICS ENGINEER

PRELIMINARY PLANS
DO NOT USE FOR CONSTRUCTION

KCI Kimley-Horn and Associates
Engineers • Planners • Scientists • Construction Managers
4601 Six Forks Road, Landmark Center II, Suite 220
Raleigh, NC 27609-5210
Phone (919) 783-9214 • Fax (919) 783-9266

SUNGATE DESIGN GROUP, P.A.
915 JONES FRANKLIN ROAD
RALEIGH, NORTH CAROLINA 27606
TEL (919) 850-0243 FAX (919) 859-9258
ENG FIRM LICENSE NO. C-890

REVISIONS

02/25/14 – R/W REVISIONS: UPDATED PROPERTY OWNER NAME AND DEED REFERENCE ON PARCEL 14; UPDATED EXISTING R/W ON PARCEL 16. – PJS
11/14/14 – R/W REVISIONS: ADJUSTED STATIONS AND/OR OFFSETS BASED ON THE FIELD STAKING ON PARCELS 12 THROUGH 15. – TEM

8/17/99

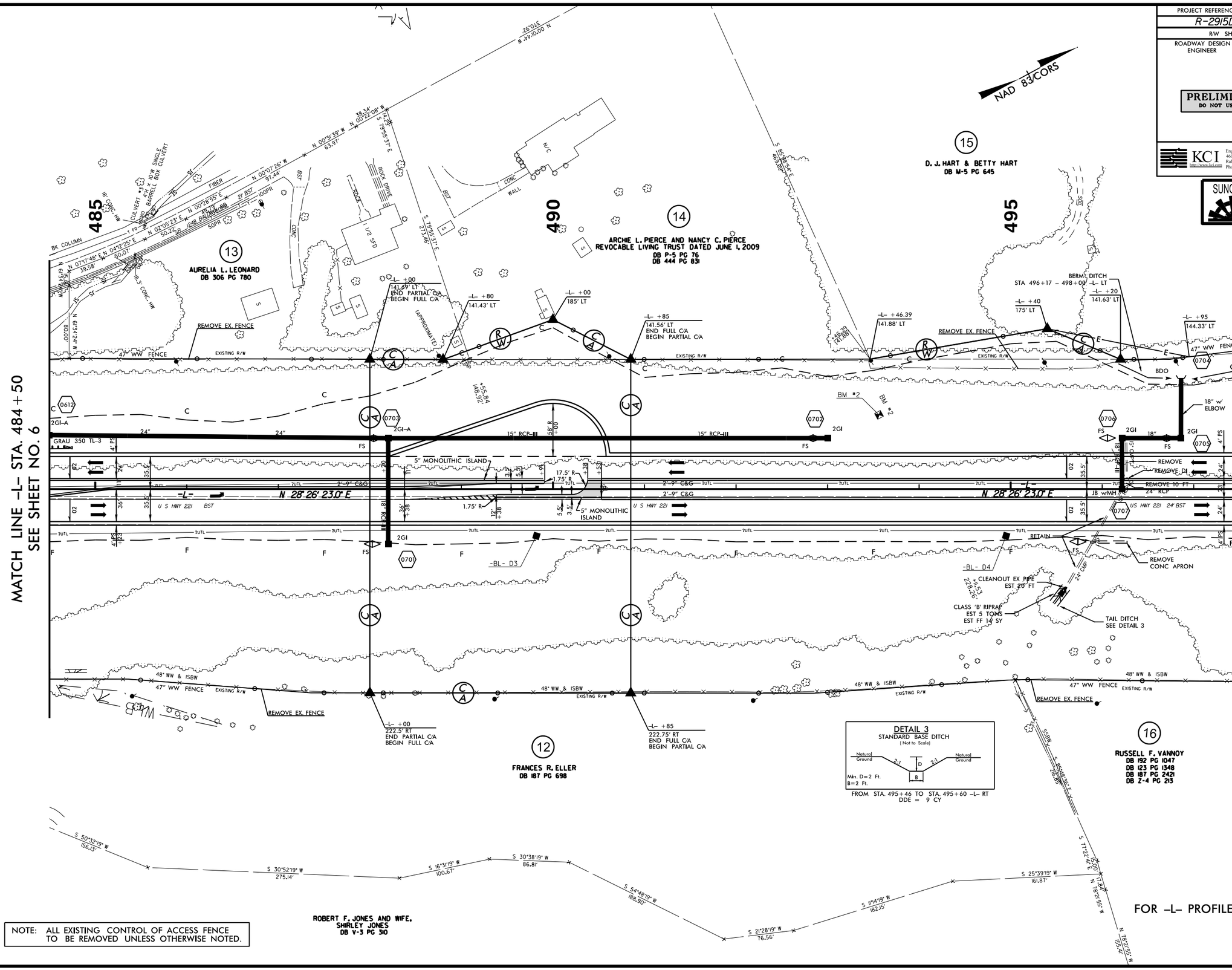

DETAIL 3
STANDARD BASE DITCH
(Not to Scale)

Natural Ground — 2:1 — D — 2:1 — Natural Ground
B

Min. D=2 Ft.
B=2 Ft.

FROM STA. 495+46 TO STA. 495+60 –L– RT
DDE = 9 CY

NOTE: ALL EXISTING CONTROL OF ACCESS FENCE TO BE REMOVED UNLESS OTHERWISE NOTED.

FOR –L– PROFILE, SEE SHEET 25

13-NOV-2014 11:04
R:\Roadway\Proj\R2915D_Rdy_psh_7.dgn
$$$$USERNAME$$$$

PROJECT REFERENCE NO.	SHEET NO.
R-2915D	8
R/W SHEET NO.	
ROADWAY DESIGN ENGINEER	HYDRAULICS ENGINEER

PRELIMINARY PLANS
DO NOT USE FOR CONSTRUCTION

KCI Technologies, Inc.
Engineers • Planners • Scientists • Construction Managers
4601 Six Forks Road, Landmark Center II, Suite 220
Raleigh, NC 27609-5210
Phone (919) 783-9214 • Fax (919) 783-9266

SUNGATE DESIGN GROUP, P.A.
915 JONES FRANKLIN ROAD
RALEIGH, NORTH CAROLINA 27606
TEL (919) 859-2243 FAX (919) 859-9258
ENG FIRM LICENSE NO. C-890

DETAIL 23
STANDARD BASE DITCH
(Not to Scale)

Type of Liner= Class I Rip-Rap to Top of Bank
FROM STA. 505+29 TO STA. 505+82 -L- LT
DDE = 65 CY

DETAIL 9
LATERAL 'V' DITCH
(Not to Scale)

Type of Liner= CLASS I Rip-Rap
FROM STA. 502+50 TO STA. 505+35 -L- LT
DDE = 397 CY

DETAIL 1
TOE PROTECTION
(Not to Scale)

Type of Liner= CLASS I Rip-Rap
FROM STA. 508+65 TO STA. 509+50 -L- LT

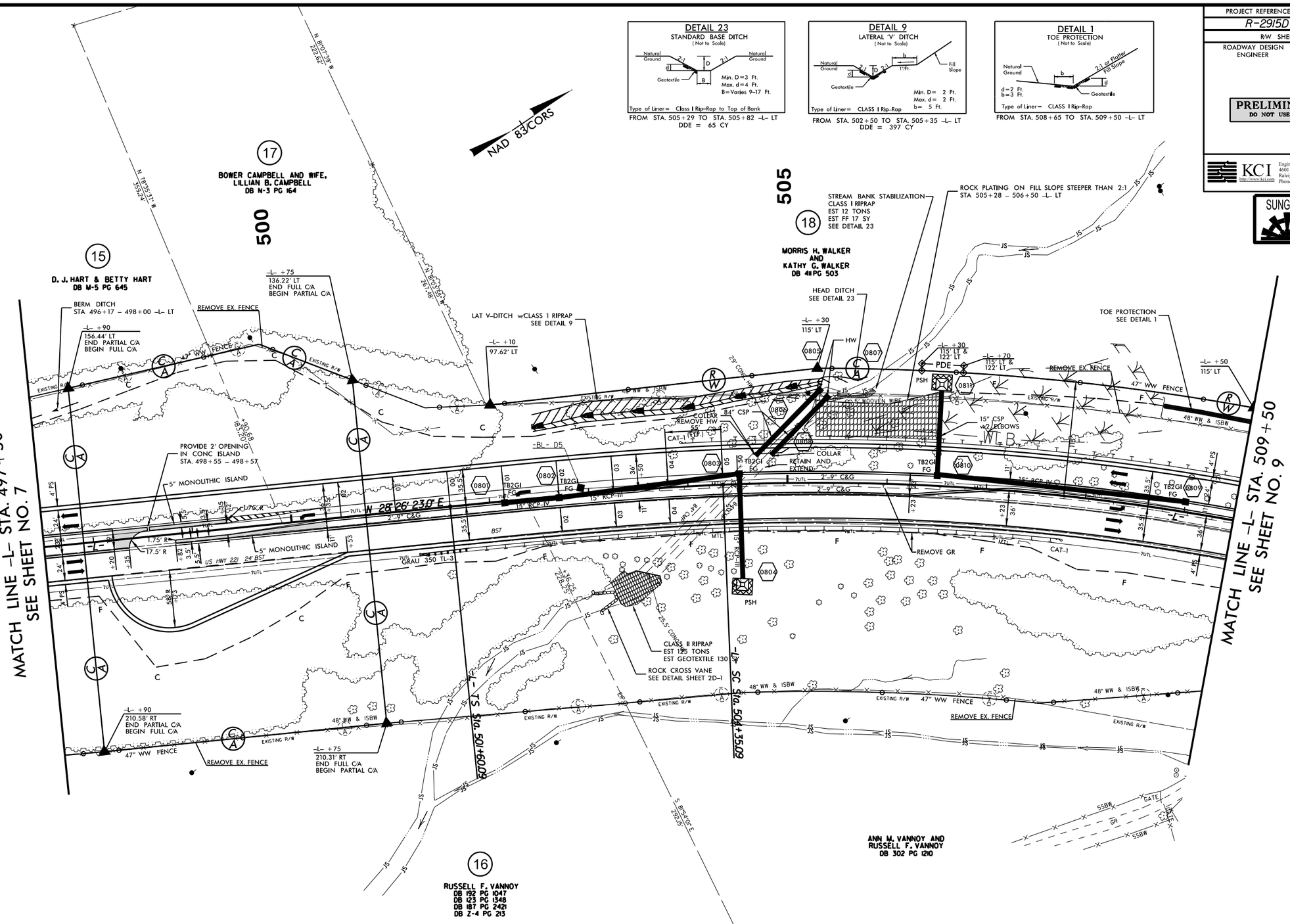

-L-	
PIs Sta 503+43.45	PI Sta 509+76.31
Θs = 3° 22' 52.3"	Δ = 26° 09' 14.0" (RT)
Ls = 275.00'	D = 2° 27' 32.6"
LT = 183.37'	L = 1,063.58'
ST = 91.70'	T = 541.22'
	R = 2,330.00'
	SE = .05
	RUNOFF = 275'

NOTE: ALL EXISTING CONTROL OF ACCESS FENCE TO BE REMOVED UNLESS OTHERWISE NOTED.

FOR -L- PROFILE, SEE SHEET 26

REVISIONS
02/25/14 - R/W REVISIONS: UPDATED EXISTING R/W AND PROPOSED C/A ON PARCEL 16. - PJS
11/14/14 - R/W REVISIONS: ADJUSTED STATIONS AND/OR OFFSETS BASED ON THE FIELD STAKING ON PARCELS 15 THROUGH 18. - TEM

8/17/99

13-NOV-2014 11:04
R:\Roadway\Proj\R2915D_Rdy_psh_8.dgn
$$$$USERNAME$$$$

PROJECT REFERENCE NO.	SHEET NO.
R-2915D	9
R/W SHEET NO.	
ROADWAY DESIGN ENGINEER	HYDRAULICS ENGINEER

PRELIMINARY PLANS
DO NOT USE FOR CONSTRUCTION

KCI Technologies, Inc.
Engineers • Planners • Scientists • Construction Managers
4601 Six Forks Road, Landmark Center II, Suite 220
Raleigh, NC 27609-5210
Phone (919) 783-9214 • Fax (919) 783-9266

SUNGATE DESIGN GROUP, P.A.
915 JONES FRANKLIN ROAD
RALEIGH, NORTH CAROLINA 27606
TEL (919) 859-6243 FAX (919) 859-6258
ENG FIRM LICENSE NO. C-690

REVISIONS

02/25/14 – R/W REVISIONS: UPDATED PROPERTY OWNER NAME AND DEED REFERENCE ON PARCEL 19; LOCATED AN UNDERGROUND TANK AT –Y29– STA. 14+75+/– LT. AND REMOVED AN EXISTING BUILDING AT –Y29– STA. 14+75+/– LT.; UPDATED EXISTING R/W AND PROPERTY LINES FROM –L– STA. 517+52.31 TO STA. 523+33.45 RT. – PJS

11/14/14 – R/W REVISIONS: ADJUSTED STATIONS AND/OR OFFSETS BASED ON THE FIELD STAKING ON PARCEL 19. – TEM

8/17/99

13-NOV-2014 11:04
R:\Roadway\Proj\R2915D_Rdy_psh_9.dgn
$$$$USERNAME$$$$

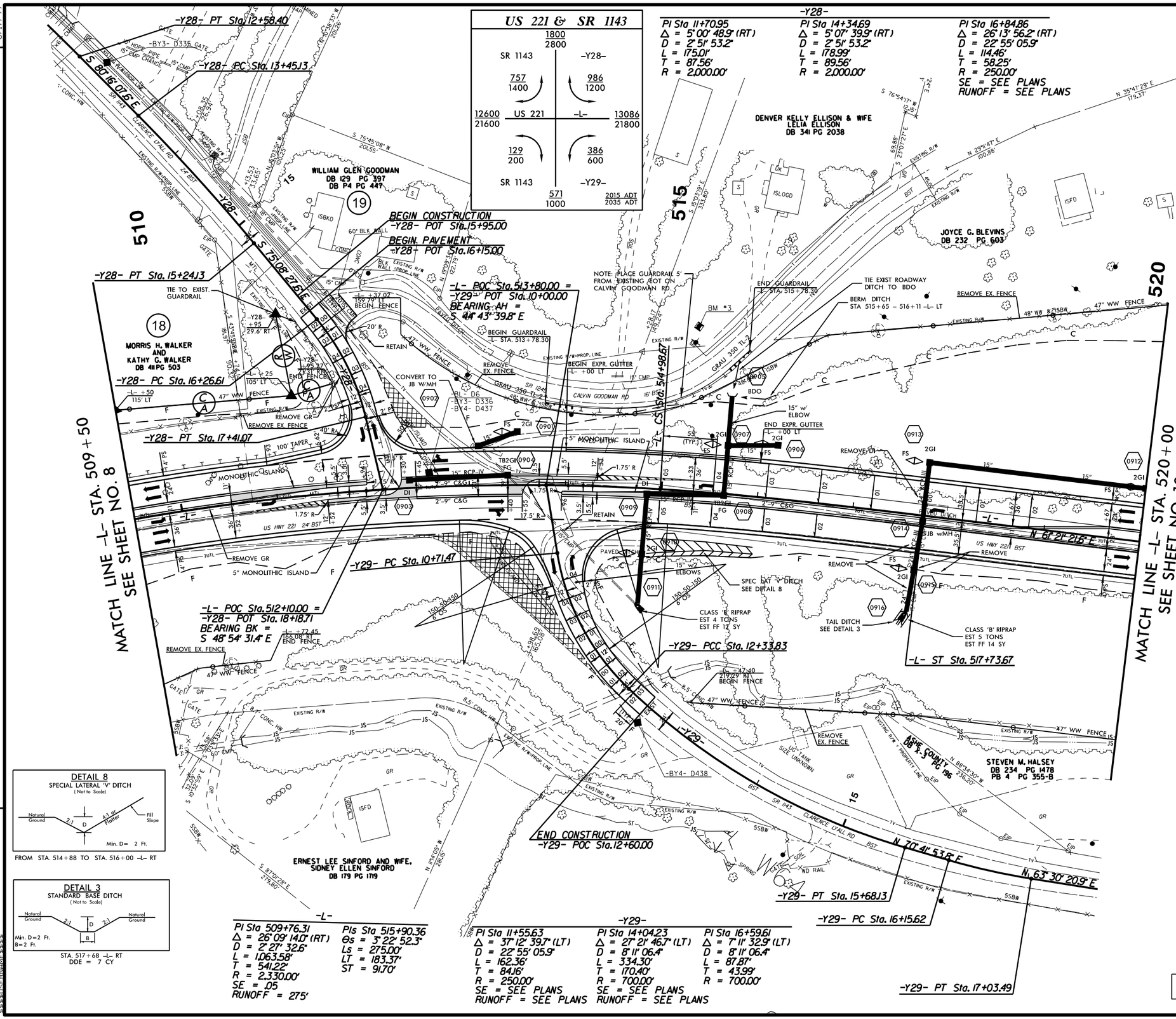

DETAIL 8
SPECIAL LATERAL 'V' DITCH
(Not to Scale)

FROM STA. 514+88 TO STA. 516+00 –L– RT

DETAIL 3
STANDARD BASE DITCH
(Not to Scale)

STA. 517+68 –L– RT
DDE = 7 CY

FOR –L– PROFILE, SEE SHEET 26
FOR –Y28– PROFILE, SEE SHEET 34
FOR –Y29– PROFILE, SEE SHEET 34

NOTE: ALL EXISTING CONTROL OF ACCESS FENCE TO BE REMOVED UNLESS OTHERWISE NOTED.

PROJECT REFERENCE NO.	SHEET NO.
R-2915D	10
R/W SHEET NO.	
ROADWAY DESIGN ENGINEER	HYDRAULICS ENGINEER

PRELIMINARY PLANS
DO NOT USE FOR CONSTRUCTION

KCI Kimley-Horn and Associates
Engineers • Planners • Scientists • Construction Managers
4601 Six Forks Road, Landmark Center II, Suite 220
Raleigh, NC 27609-5210
Phone (919) 783-9214 • Fax (919) 783-9266

SUNGATE DESIGN GROUP, P.A.
915 JONES FRANKLIN ROAD
RALEIGH, NORTH CAROLINA 27606
TEL (919) 859-9243 FAX (919) 859-6258
ENG FIRM LICENSE NO. C-890

8/17/99

REVISIONS

02/2514 – R/W REVISIONS: UPDATED EXISTING R/W AND PROPERTY LINES FROM –L– STA. 517+52.31 TO STA. 523+33.45 RT. – PJS
11/14/14 – R/W REVISIONS: ADJUSTED STATIONS AND/OR OFFSETS BASED ON THE FIELD STAKING ON PARCELS 20 THROUGH 22. – TEM

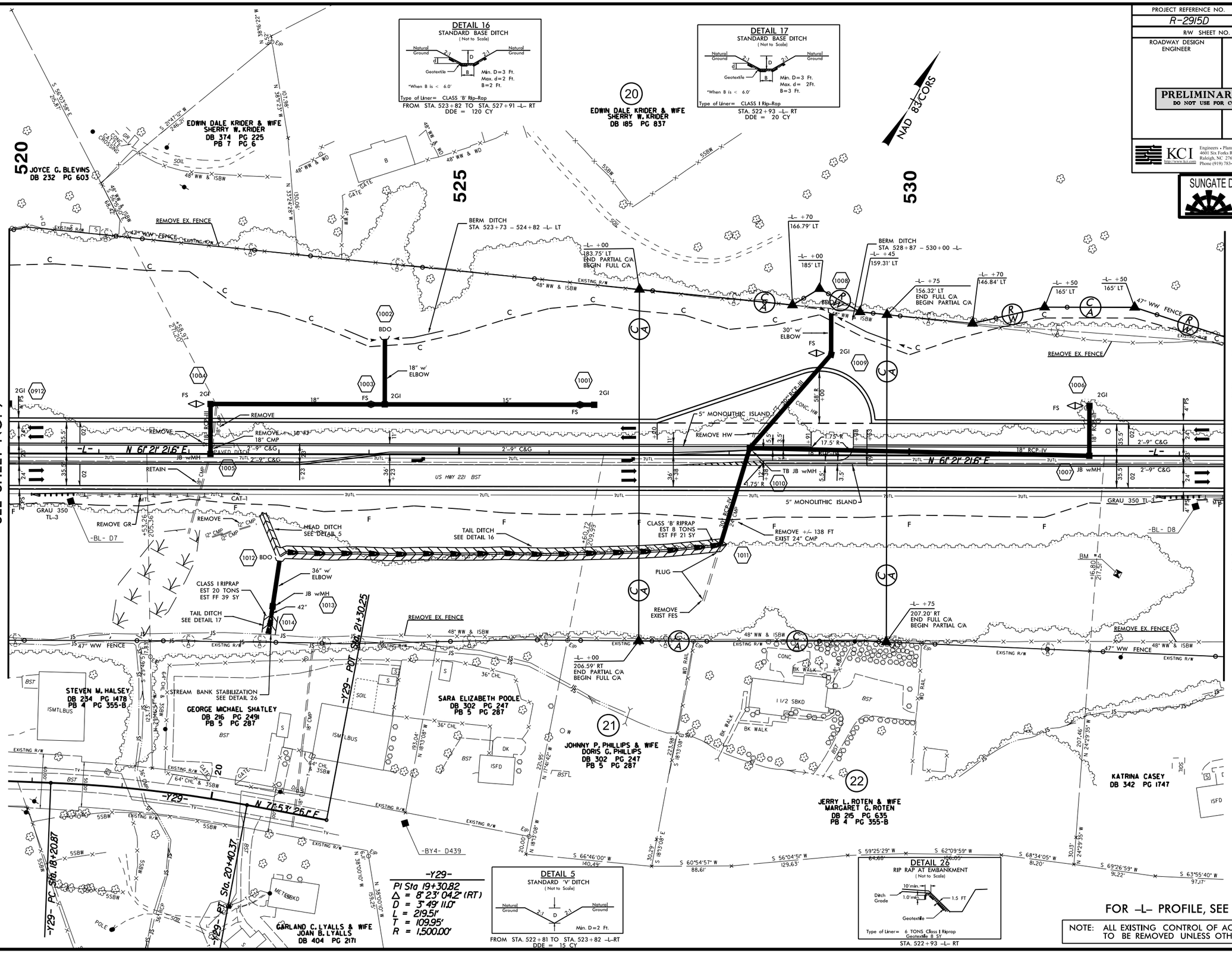

13-NOV-2014 11:04
R:\Roadway\Proj\R2915D_Rdy_psh_10.dgn
$$$$USERNAME$$$$

PROJECT REFERENCE NO.	SHEET NO.
R-2915D	11
R/W SHEET NO.	
ROADWAY DESIGN ENGINEER	HYDRAULICS ENGINEER

PRELIMINARY PLANS
DO NOT USE FOR CONSTRUCTION

KCI Engineers • Planners • Scientists • Construction Managers
4601 Six Forks Road, Landmark Center II, Suite 220
Raleigh, NC 27609-5210
Phone (919) 783-9214 • Fax (919) 783-9266

SUNGATE DESIGN GROUP, P.A.
915 JONES FRANKLIN ROAD
RALEIGH, NORTH CAROLINA 27606
TEL (919) 859-2243 FAX (919) 859-6258
ENG FIRM LICENSE NO. C-690

REVISIONS

8/17/99 111414 – R/W REVISIONS: ADJUSTED STATIONS AND OFFSETS BASED ON THE FIELD STAKING ON PARCELS 20, 23, AND 24. – TEM

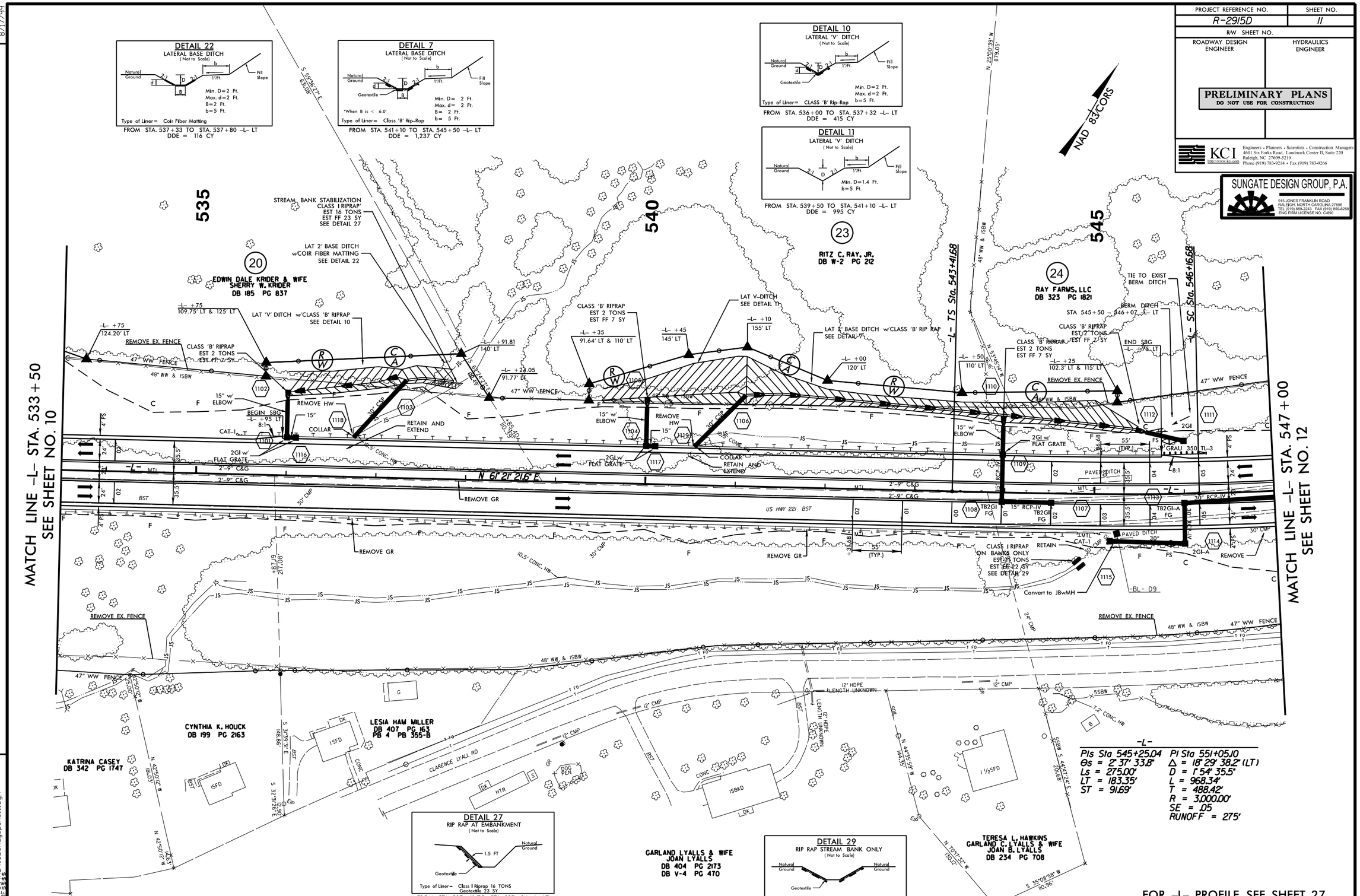

FOR –L– PROFILE, SEE SHEET 27

NOTE: ALL EXISTING CONTROL OF ACCESS FENCE TO BE REMOVED UNLESS OTHERWISE NOTED.

13-NOV-2014 11:05
R:\Roadway\Proj\R2915D_Rdy_psh_11.dgn
$$$$USERNAME$$$$

PROJECT REFERENCE NO.	SHEET NO.
R-2915D	12
R/W SHEET NO.	
ROADWAY DESIGN ENGINEER	HYDRAULICS ENGINEER

PRELIMINARY PLANS
DO NOT USE FOR CONSTRUCTION

KCI Engineers • Planners • Scientists • Construction Managers
4601 Six Forks Road, Landmark Center II, Suite 220
Raleigh, NC 27609-5210
Phone (919) 783-9214 • Fax (919) 783-9266

SUNGATE DESIGN GROUP, P.A.
915 JONES FRANKLIN ROAD
RALEIGH, NORTH CAROLINA 27606
TEL (919) 859-2243 FAX (919) 859-6258
ENG FIRM LICENSE NO. C-690

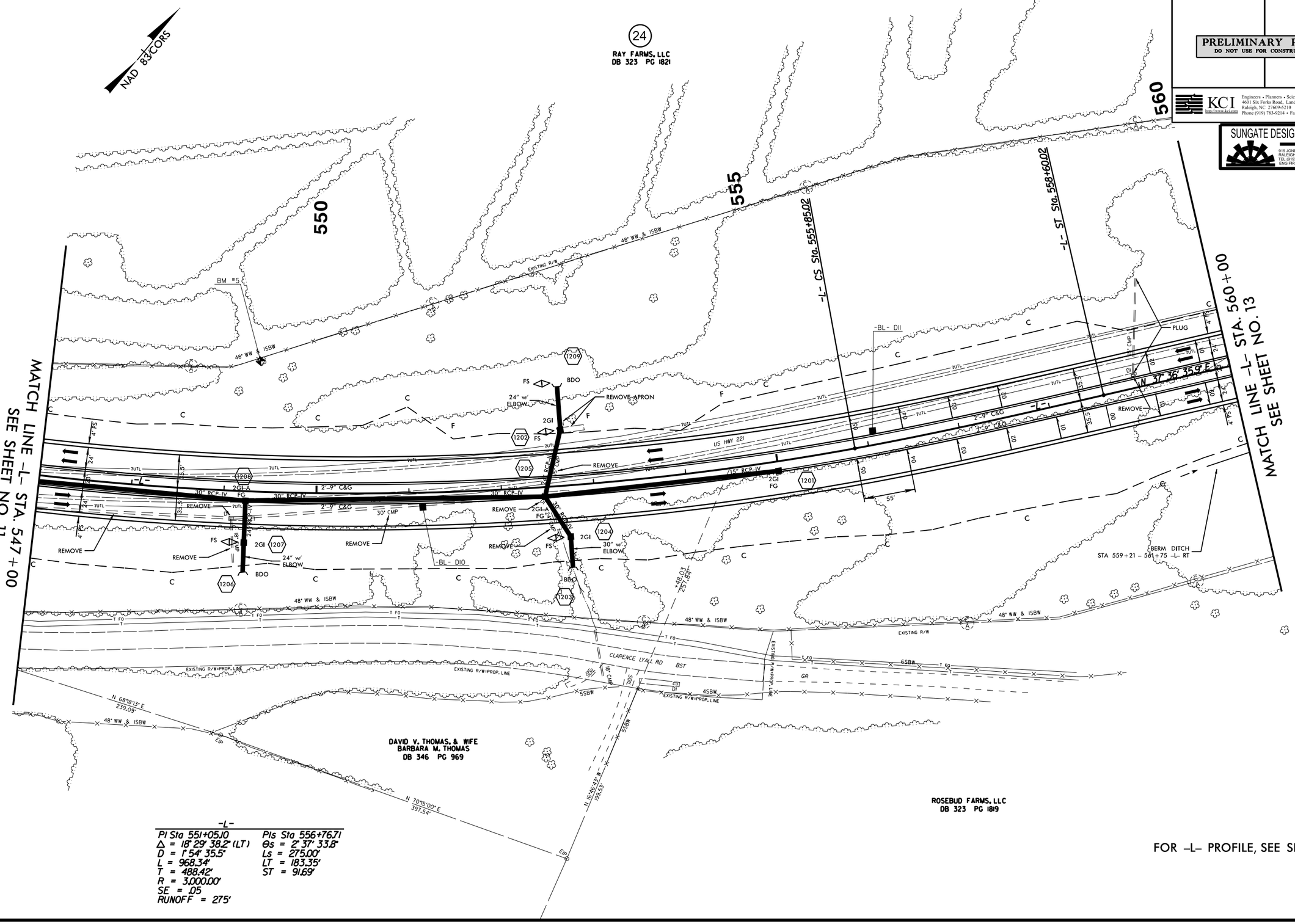

-L-	
PI Sta 551+05.10	PIs Sta 556+76.71
Δ = 18° 29' 38.2" (LT)	Θs = 2° 37' 33.8"
D = 1° 54' 35.5"	Ls = 275.00'
L = 968.34'	LT = 183.35'
T = 488.42'	ST = 91.69'
R = 3,000.00'	
SE = .05	
RUNOFF = 275'	

FOR -L- PROFILE, SEE SHEET 28

REVISIONS

8/17/99

29-JUL-2013 11:29
R:\Roadway\Proj\R2915D_Rdy_psh_12.dgn

PROJECT REFERENCE NO.	SHEET NO.
R-2915D	13
R/W SHEET NO.	
ROADWAY DESIGN ENGINEER	HYDRAULICS ENGINEER

PRELIMINARY PLANS
DO NOT USE FOR CONSTRUCTION

KCI
http://www.kci.com
Engineers • Planners • Scientists • Construction Managers
4601 Six Forks Road, Landmark Center II, Suite 220
Raleigh, NC 27609-5210
Phone (919) 783-9214 • Fax (919) 783-9266

SUNGATE DESIGN GROUP, P.A.
915 JONES FRANKLIN ROAD
RALEIGH, NORTH CAROLINA 27606
TEL (919) 859-2243 FAX (919) 859-6258
ENG FIRM LICENSE NO. C-690

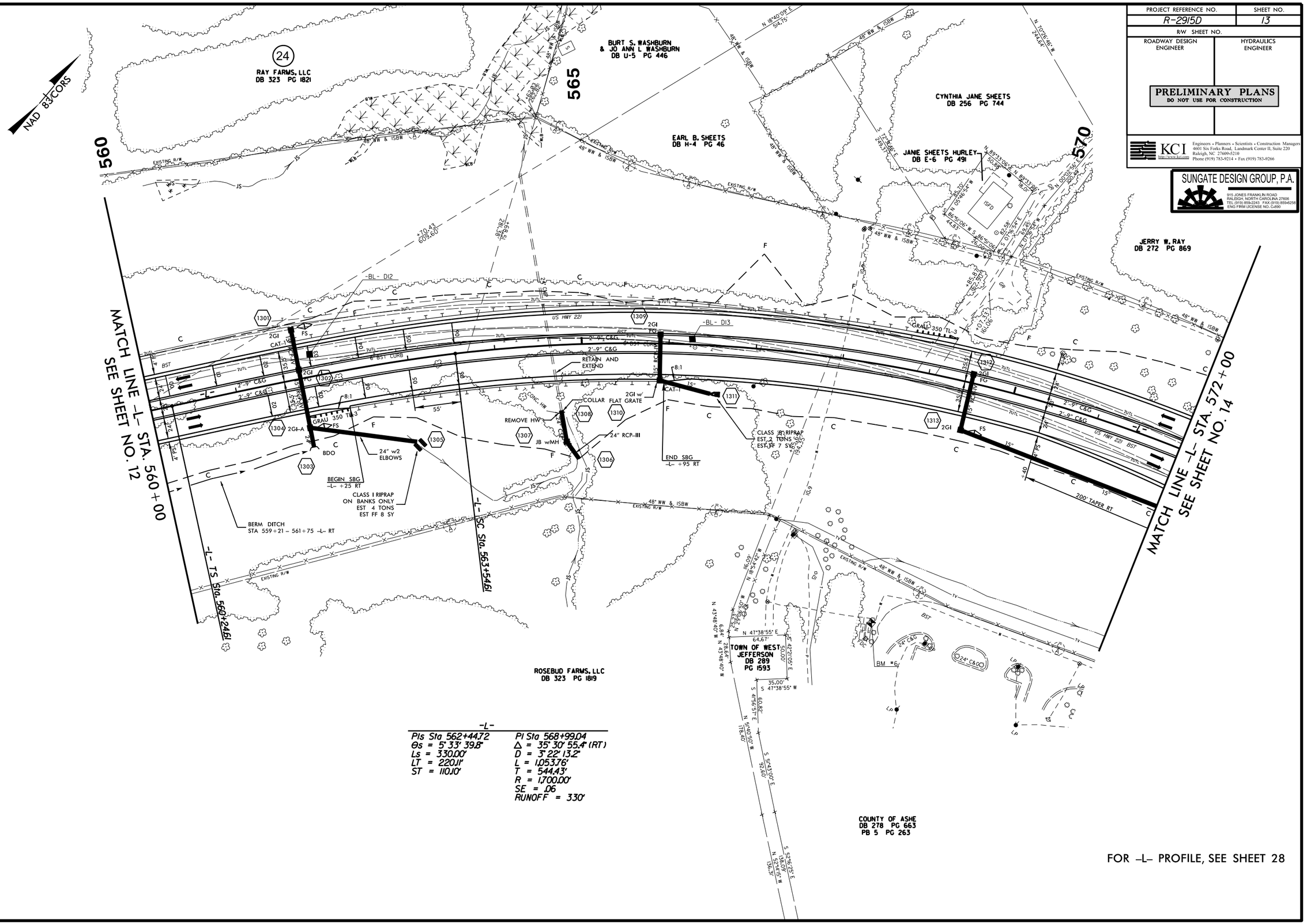

-L-	
Pls Sta 562+44.72	PI Sta 568+99.04
Θs = 5°33' 39.8"	Δ = 35°30' 55.4" (RT)
Ls = 330.00'	D = 3°22' 13.2"
LT = 220.01'	L = 1,053.76'
ST = 110.10'	T = 544.43'
	R = 1,700.00'
	SE = .06
	RUNOFF = 330'

REVISIONS

8/17/99

29-JUL-2013 11:29
R:\Roadway\Proj\R2915D_Rdy_psh_13.dgn

PROJECT REFERENCE NO.	SHEET NO.
R-2915D	14
R/W SHEET NO.	
ROADWAY DESIGN ENGINEER	HYDRAULICS ENGINEER

PRELIMINARY PLANS
DO NOT USE FOR CONSTRUCTION

KCI Technologies, Inc.
Engineers • Planners • Scientists • Construction Managers
4601 Six Forks Road, Landmark Center II, Suite 220
Raleigh, NC 27609-5210
Phone (919) 783-9214 • Fax (919) 783-9266

SUNGATE DESIGN GROUP, P.A.
915 JONES FRANKLIN ROAD
RALEIGH, NORTH CAROLINA 27606
TEL (919) 859-2243 FAX (919) 859-6258
ENG FIRM LICENSE NO. C-690

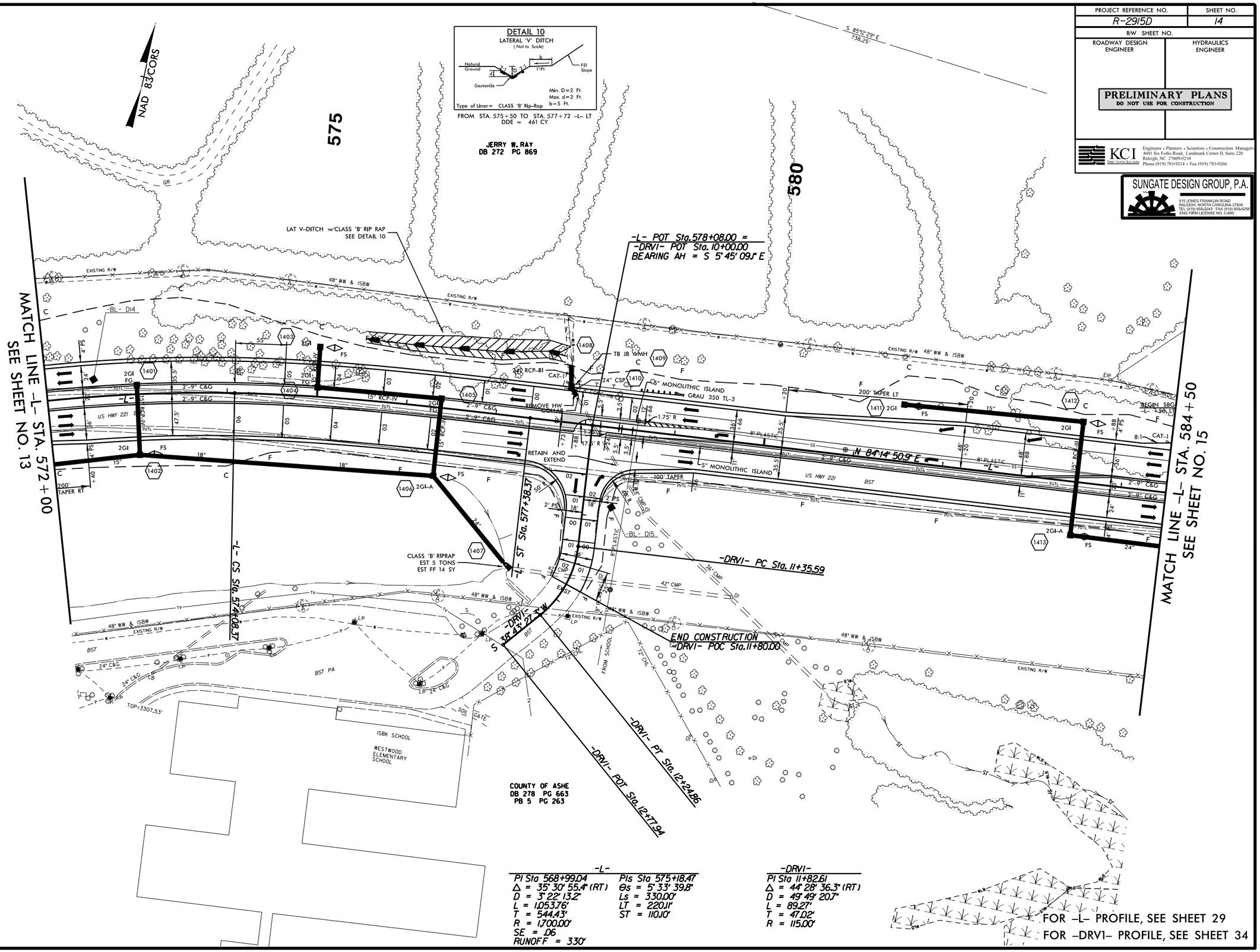

FOR -L- PROFILE, SEE SHEET 29
FOR -DRV1- PROFILE, SEE SHEET 34

REVISIONS

8/17/99

29-JUL-2013 11:29
R:\Roadway\Proj\R2915D_Rdy_psh_14.dgn
$$$$USERNAME$$$$

PROJECT REFERENCE NO.	SHEET NO.
R-2915D	15
R/W SHEET NO.	
ROADWAY DESIGN ENGINEER	HYDRAULICS ENGINEER

PRELIMINARY PLANS
DO NOT USE FOR CONSTRUCTION

KCI
http://www.kci.com
Engineers • Planners • Scientists • Construction Managers
4601 Six Forks Road, Landmark Center II, Suite 220
Raleigh, NC 27609-5210
Phone (919) 783-9214 • Fax (919) 783-9266

SUNGATE DESIGN GROUP, P.A.
915 JONES FRANKLIN ROAD
RALEIGH, NORTH CAROLINA 27606
TEL: (919) 859-9243 FAX (919) 859-9258
ENG FIRM LICENSE NO. C-690

REVISIONS

01/09/14 – R/W REVISION: REVISED TDE AT –L– STA. 587+33 LT ON PARCEL 25. – TLW
11/14/14 – R/W REVISIONS: ADJUSTED STATIONS AND/OR OFFSETS BASED ON THE FIELD STAKING ON PARCELS 25 THROUGH 27. – TEM

8/17/99

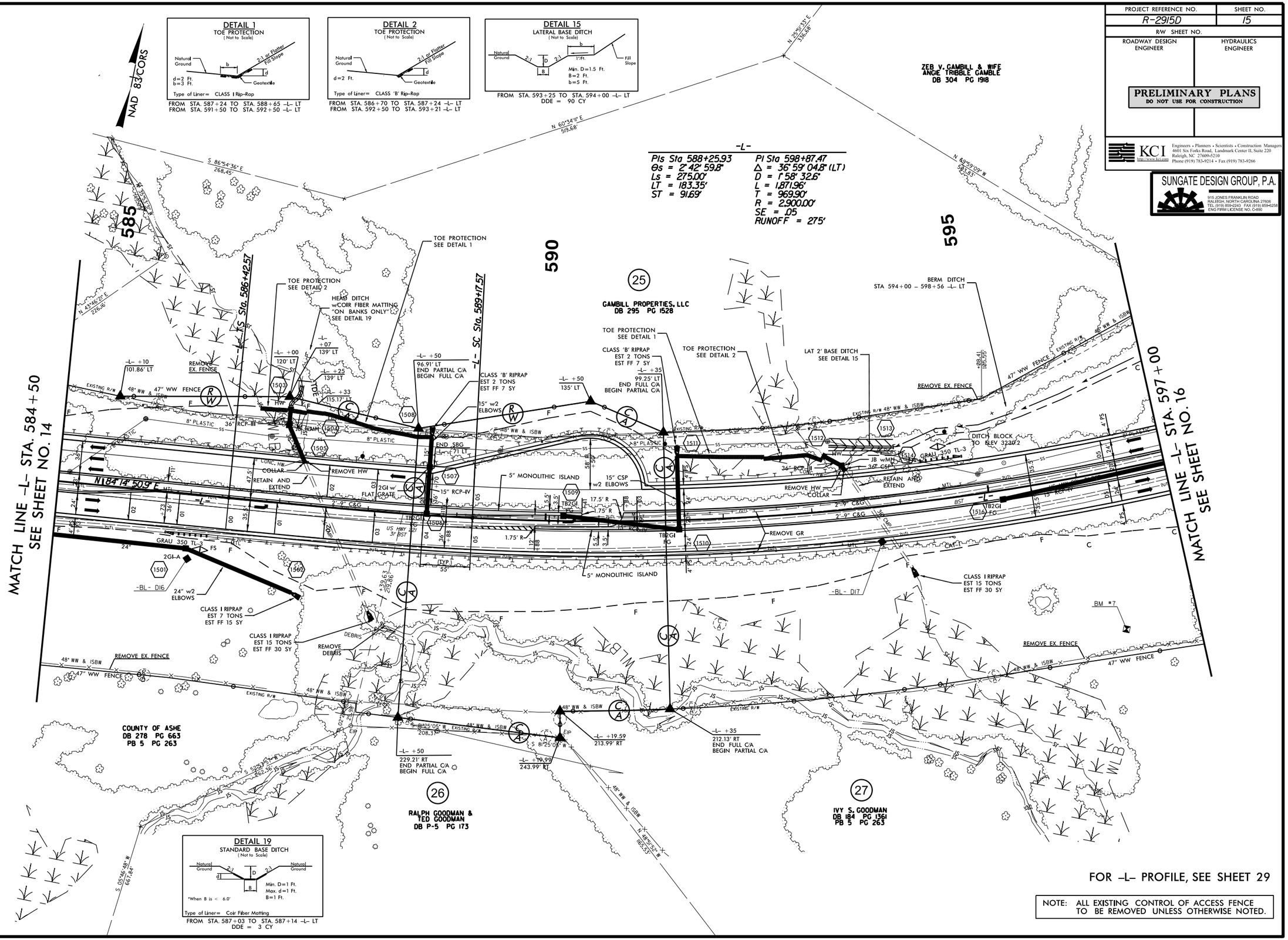

FOR –L– PROFILE, SEE SHEET 29

NOTE: ALL EXISTING CONTROL OF ACCESS FENCE TO BE REMOVED UNLESS OTHERWISE NOTED.

13-NOV-2014 11:05
R:\Roadway\Proj\R2915D_Rdy_psh_15.dgn
$$$$USERNAME$$$$

PROJECT REFERENCE NO.	SHEET NO.
R-2915D	16
R/W SHEET NO.	
ROADWAY DESIGN ENGINEER	HYDRAULICS ENGINEER

PRELIMINARY PLANS
DO NOT USE FOR CONSTRUCTION

KCI www.kci.com
Engineers • Planners • Scientists • Construction Managers
4601 Six Forks Road, Landmark Center II, Suite 220
Raleigh, NC 27609-5210
Phone (919) 783-9214 • Fax (919) 783-9266

SUNGATE DESIGN GROUP, P.A.
915 JONES FRANKLIN ROAD
RALEIGH, NORTH CAROLINA 27606
TEL (919) 859-2243 FAX (919) 859-6258
ENG FIRM LICENSE NO. C-690

REVISIONS

1/14/14 - R/W REVISIONS: ADJUSTED STATIONS AND/OR OFFSETS BASED ON THE FIELD STAKING ON PARCELS 28 AND 29. - TEM

8/17/99

13-NOV-2014 11:05
R:\Roadway\Proj\R2915D_Rdy_psh_16.dgn

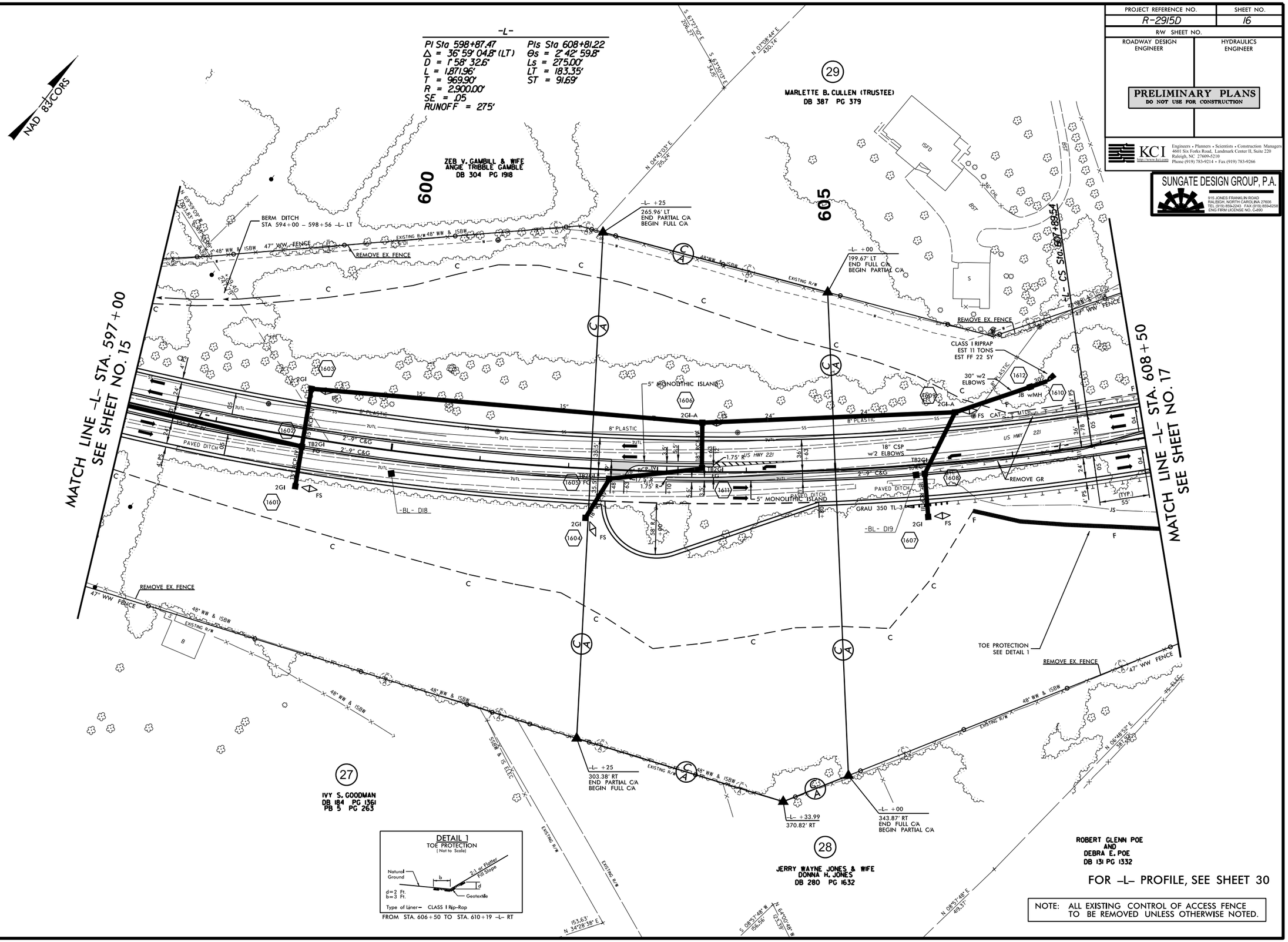

FOR -L- PROFILE, SEE SHEET 30

NOTE: ALL EXISTING CONTROL OF ACCESS FENCE TO BE REMOVED UNLESS OTHERWISE NOTED.

PROJECT REFERENCE NO.	SHEET NO.
R-2915D	17
R/W SHEET NO.	
ROADWAY DESIGN ENGINEER	HYDRAULICS ENGINEER

PRELIMINARY PLANS
DO NOT USE FOR CONSTRUCTION

KCI Technologies, Inc.
Engineers • Planners • Scientists • Construction Managers
4601 Six Forks Road, Landmark Center II, Suite 220
Raleigh, NC 27609-5210
Phone (919) 783-9214 • Fax (919) 783-9266

SUNGATE DESIGN GROUP, P.A.
915 JONES FRANKLIN ROAD
RALEIGH, NORTH CAROLINA 27606
TEL (919) 859-2243 FAX (919) 859-6258
ENG FIRM LICENSE NO. C-690

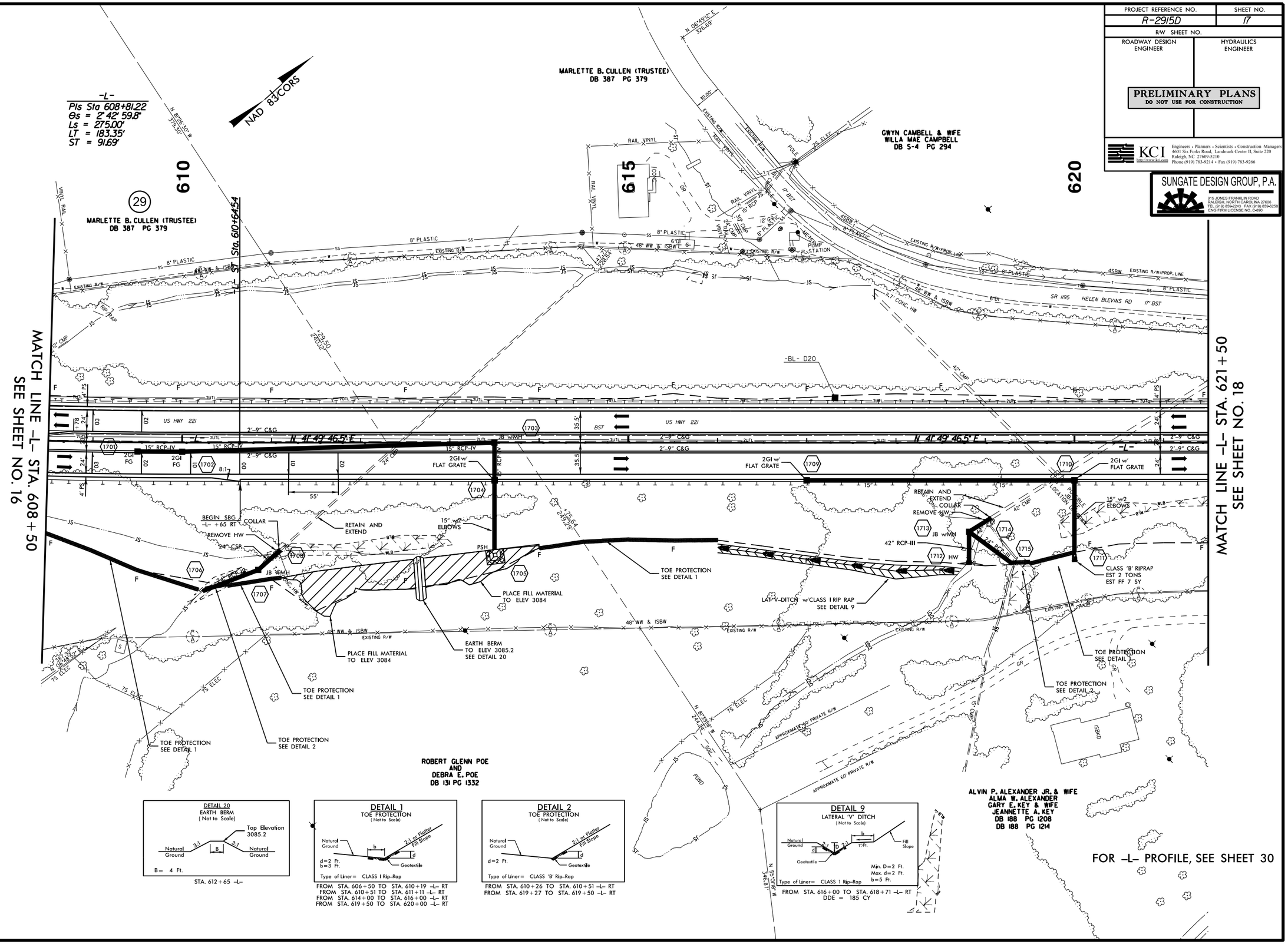

REVISIONS

8/17/99

29-JUL-2013 11:30
R:\Roadway\Proj\R2915D_Rdy_psh_17.dgn
$$$$USERNAME$$$$

PROJECT REFERENCE NO.	SHEET NO.
R-2915D	18
R/W SHEET NO.	
ROADWAY DESIGN ENGINEER	HYDRAULICS ENGINEER

PRELIMINARY PLANS
DO NOT USE FOR CONSTRUCTION

KCI
Engineers • Planners • Scientists • Construction Managers
4601 Six Forks Road, Landmark Center II, Suite 220
Raleigh, NC 27609-5210
Phone (919) 783-9214 • Fax (919) 783-9266

SUNGATE DESIGN GROUP, P.A.
915 JONES FRANKLIN ROAD
RALEIGH, NORTH CAROLINA 27606
TEL (919) 859-2243 FAX (919) 859-6258
ENG FIRM LICENSE NO. C-890

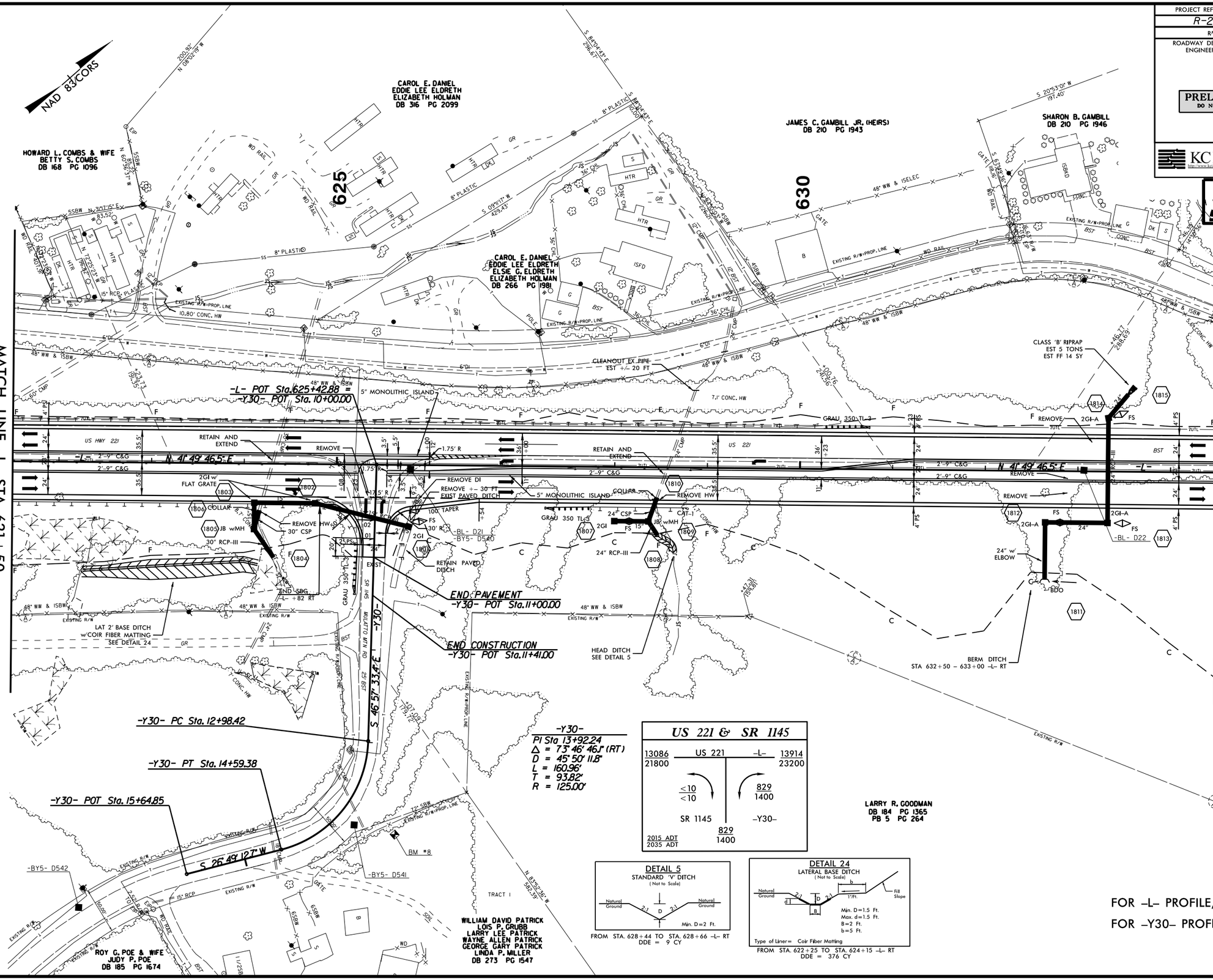

FOR -L- PROFILE, SEE SHEET 31
FOR -Y30- PROFILE, SEE SHEET 35

REVISIONS

8/17/99

29-JUL-2013 11:30
R:\Roadway\Proj\R2915D_Rdy_psh_18.dgn
$$USERNAME$$

PROJECT REFERENCE NO.	SHEET NO.
R-2915D	19
R/W SHEET NO.	
ROADWAY DESIGN ENGINEER	HYDRAULICS ENGINEER

PRELIMINARY PLANS
DO NOT USE FOR CONSTRUCTION

KCI
http://www.kci.com
Engineers • Planners • Scientists • Construction Managers
4601 Six Forks Road, Landmark Center II, Suite 220
Raleigh, NC 27609-5210
Phone (919) 783-9214 • Fax (919) 783-9266

SUNGATE DESIGN GROUP, P.A.
915 JONES FRANKLIN ROAD
RALEIGH, NORTH CAROLINA 27606
TEL (919) 859-2243 FAX (919) 859-6258
ENG FIRM LICENSE NO. C-890

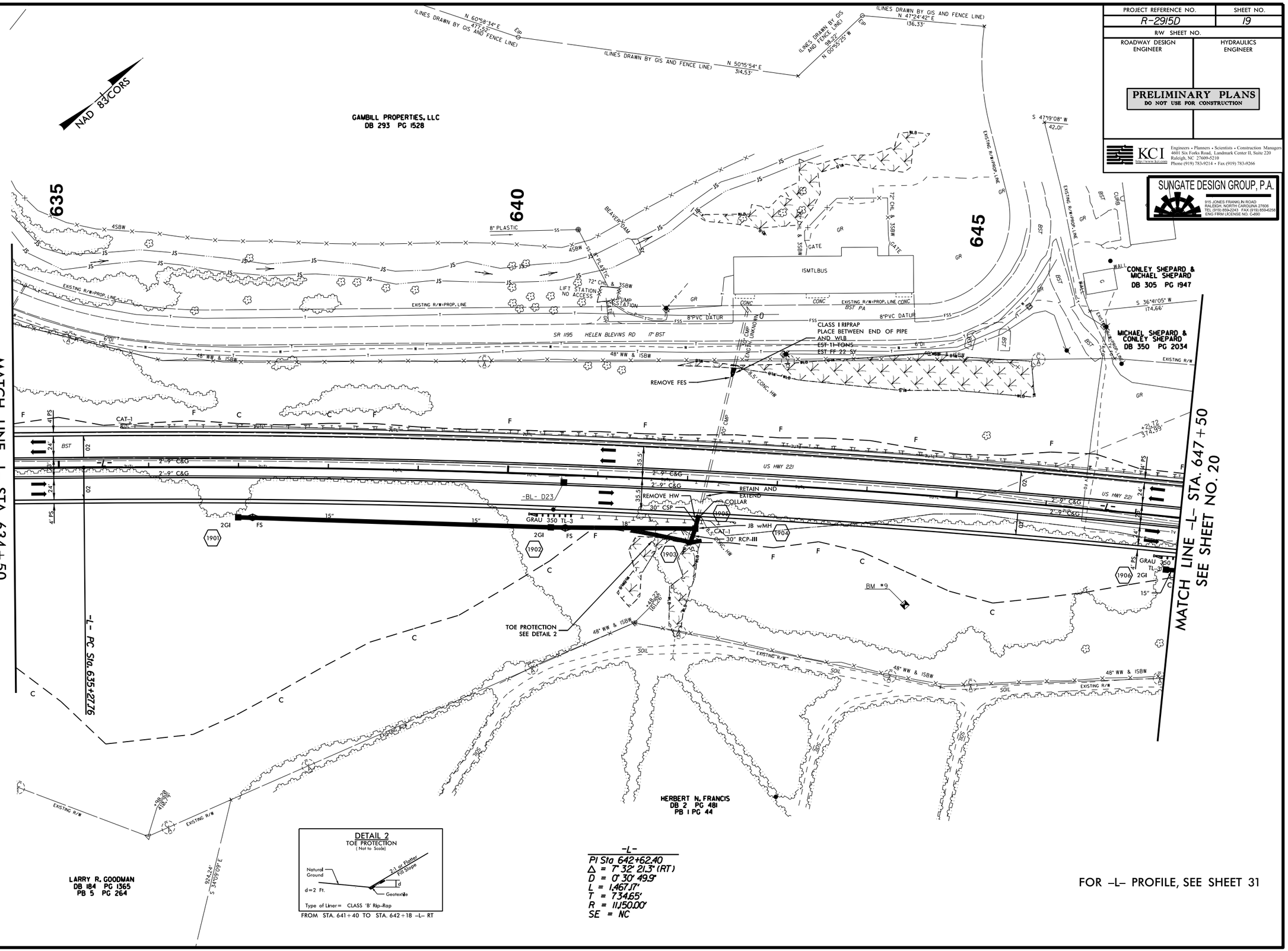

REVISIONS

8/17/99

29-JUL-2013 11:30
R:\Roadway\Proj\R2915D_Rdy_psh_19.dgn
$$$$USERNAME$$$$

PROJECT REFERENCE NO.	SHEET NO.
R-2915D	20
R/W SHEET NO.	
ROADWAY DESIGN ENGINEER	HYDRAULICS ENGINEER

PRELIMINARY PLANS
DO NOT USE FOR CONSTRUCTION

KCI www.kci.com
Engineers • Planners • Scientists • Construction Managers
4601 Six Forks Road, Landmark Center II, Suite 220
Raleigh, NC 27609-5210
Phone (919) 783-9214 • Fax (919) 783-9266

SUNGATE DESIGN GROUP, P.A.
915 JONES FRANKLIN ROAD
RALEIGH, NORTH CAROLINA 27606
TEL (919) 859-2243 FAX (919) 859-9258
ENG FIRM LICENSE NO. C-965

REVISIONS

8/17/99

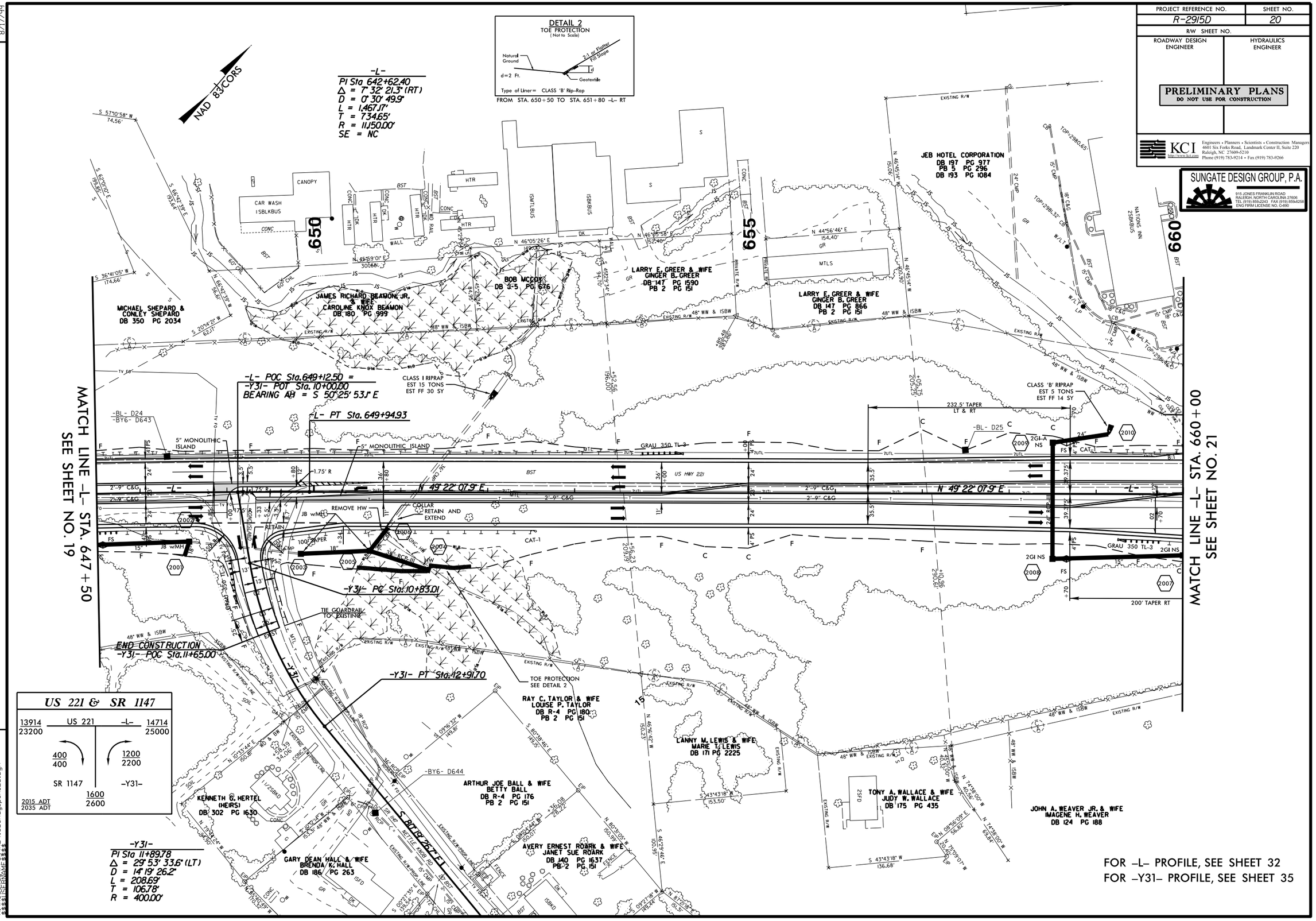

FOR -L- PROFILE, SEE SHEET 32
FOR -Y31- PROFILE, SEE SHEET 35

23-JUL-2013 11:30
R:\Roadway\Proj\R2915D_Rdy_psh_20.dgn

PROJECT REFERENCE NO.	SHEET NO.
R-2915D	21
R/W SHEET NO.	
ROADWAY DESIGN ENGINEER	HYDRAULICS ENGINEER

PRELIMINARY PLANS
DO NOT USE FOR CONSTRUCTION

KCI Engineers • Planners • Scientists • Construction Managers
4601 Six Forks Road, Landmark Center II, Suite 220
Raleigh, NC 27609-5210
Phone (919) 783-9214 • Fax (919) 783-9266

SUNGATE DESIGN GROUP, P.A.
915 JONES FRANKLIN ROAD
RALEIGH, NORTH CAROLINA 27606
TEL (919) 859-2243 FAX (919) 859-6258
ENG FIRM LICENSE NO. C-690

REVISED SIGNAL

FOR –L– PROFILE, SEE SHEET 32
FOR –Y32– PROFILE, SEE SHEET 35
FOR CULVERT PLANS, SEE SHEET C–1 TO C–6

NAD 83/CORS

8/17/99

REVISIONS

022514 – R/W REVISIONS; LOCATED AN ADDITION TO THE EXISTING BUILDING ON PARCEL 30 – PJS
082914 – R/W REVISIONS; UPDATED PROPERTY OWNER NAME AND DEED REFERENCE AND ADDED "DO NOT DISTURB WELL" NOTE ON PARCEL 30 – PJS
11/14/14 – R/W REVISIONS; ADJUSTED STATIONS AND/OR OFFSETS BASED ON THE FIELD STAKING ON PARCEL 30 – TEM

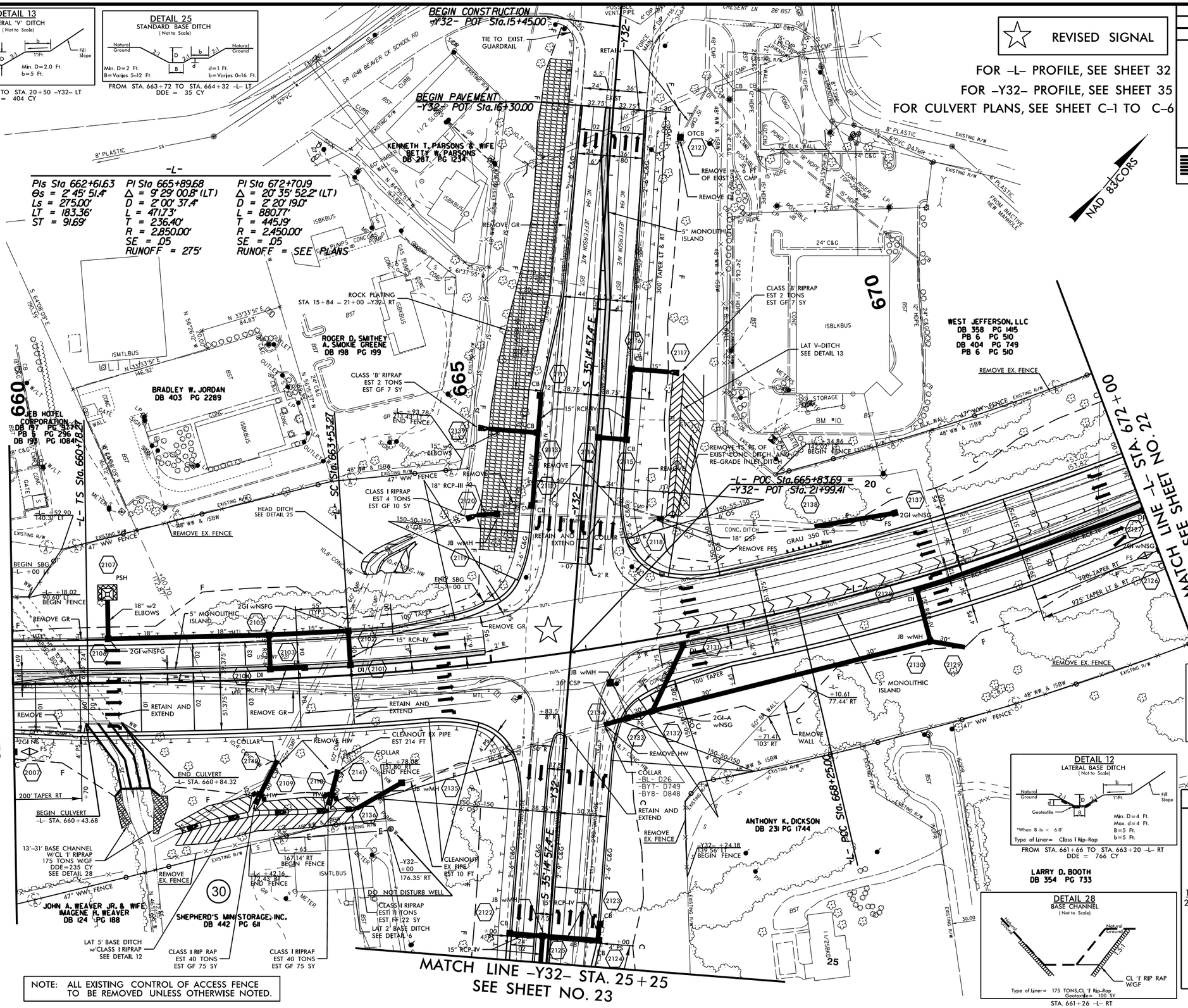

DETAIL 13
LATERAL 'V' DITCH
(Not to Scale)
Natural Ground, 3:1, D, 3:1, b, 1'/ft., Fill Slope
Min. D=2.0 Ft.
b=5 Ft.
FROM STA. 19+00 TO STA. 20+50 –Y32– LT
DDE = 404 CY

DETAIL 25
STANDARD BASE DITCH
(Not to Scale)
Natural Ground, 2:1, D, 2:1, b, 2:1, Natural Ground, B, d
Min. D=2 Ft.
B=Varies 5–12 Ft.
d=1 Ft.
b=Varies 0–16 Ft.
FROM STA. 663+72 TO STA. 664+32 –L– LT
DDE = 35 CY

DETAIL 6
LATERAL BASE DITCH
(Not to Scale)
Natural Ground, 2:1, D, 2:1, b, 1'/ft., Fill Slope, B
Min. D=2 Ft.
B=2 Ft.
b=5 Ft.
FROM STA. 663+20 TO STA. 663+50 –L– RT
DDE = 131 CY

DETAIL 12
LATERAL BASE DITCH
(Not to Scale)
Natural Ground, 2:1, D, 2:1, b, 1'/ft., Fill Slope, d, Geotextile, B
Min. D=4 Ft.
Max. d=4 Ft.
B=5 Ft.
b=5 Ft.
*When B is < 6.0'
Type of Liner= Class I Rip-Rap
FROM STA. 661+66 TO STA. 663+20 –L– RT
DDE = 766 CY

DETAIL 28
BASE CHANNEL
(Not to Scale)
Natural Ground, CL 'I' RIP RAP W/GF, 3:1
Type of Liner= 175 TONS,CL 'I' Rip-Rap
Geotextile= 100 SY
STA. 661+26 –L– RT

US 221 & SR 1143

	18771 / 29200	
NC 194		–Y32–
5600 / 8600		7914 / 12200
14714 / 25000	US 221	–L– 16714 / 28000
1643 / 3000		1329 / 2400
NC 163		–Y32–
	8229 / 13800	2015 ADT / 2035 ADT

13-NOV-2014 11:05
R:\Roadway\Proj\R2915D_Rdy_psh_21.dgn
$$$$USERNAME$$$$

PROJECT REFERENCE NO.	SHEET NO.
R-2915D	22
R/W SHEET NO.	
ROADWAY DESIGN ENGINEER	HYDRAULICS ENGINEER

PRELIMINARY PLANS
DO NOT USE FOR CONSTRUCTION

KCI Technologies, Inc.
Engineers • Planners • Scientists • Construction Managers
4601 Six Forks Road, Landmark Center II, Suite 220
Raleigh, NC 27609-5210
Phone (919) 783-9214 • Fax (919) 783-9266

SUNGATE DESIGN GROUP, P.A.
915 JONES FRANKLIN ROAD
RALEIGH, NORTH CAROLINA 27606
TEL (919) 858-2243 FAX (919) 859-6258
ENG FIRM LICENSE NO. C-690

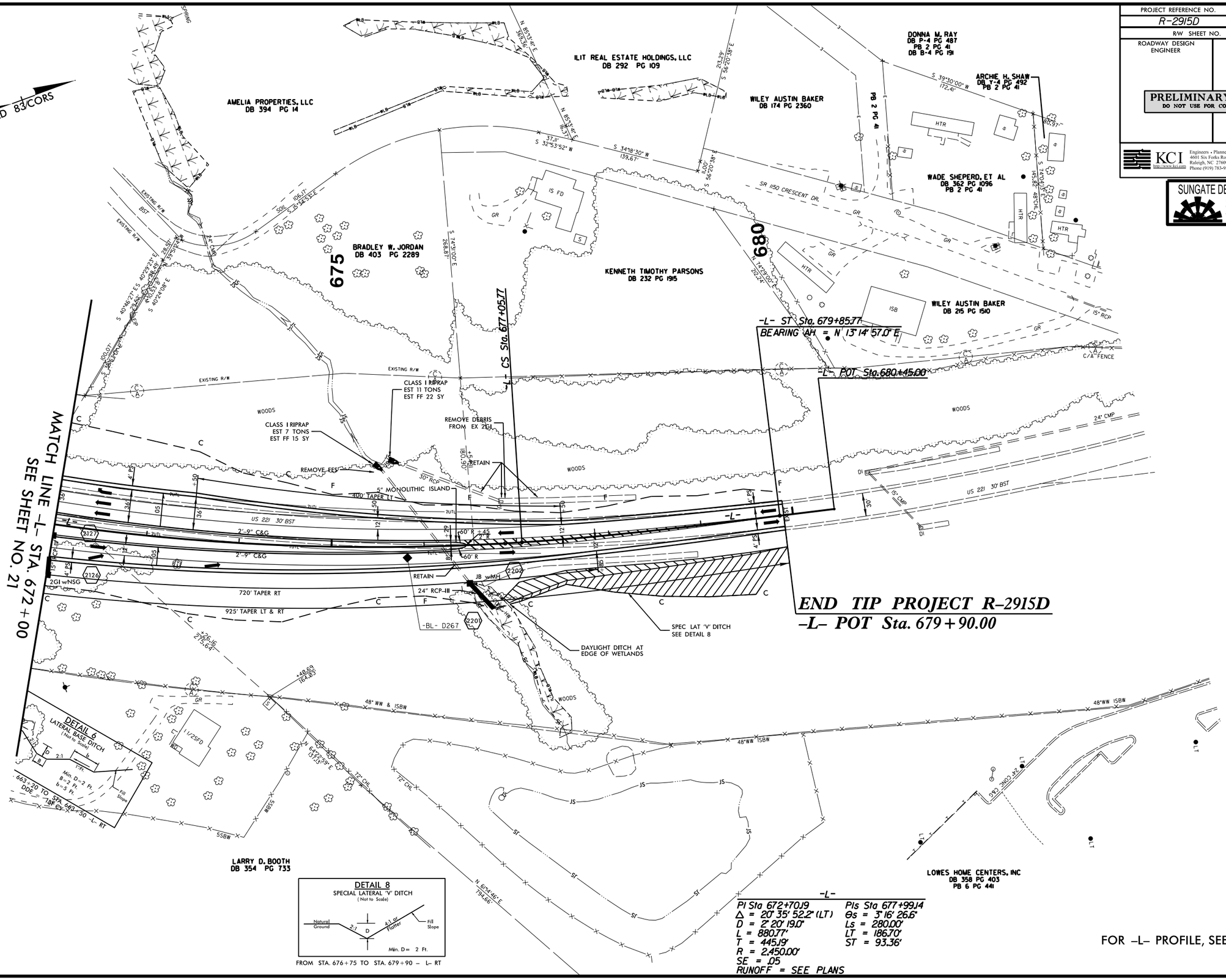

REVISIONS

8/17/99

29-JUL-2013 11:30
R:\Roadway\Proj\R2915D_Rdy_psh_22.dgn
$$$$USERNAME$$$$

PROJECT REFERENCE NO.	SHEET NO.
R-2915D	23
R/W SHEET NO.	
ROADWAY DESIGN ENGINEER	HYDRAULICS ENGINEER

PRELIMINARY PLANS
DO NOT USE FOR CONSTRUCTION

KCI Engineers • Planners • Scientists • Construction Managers
4601 Six Forks Road, Landmark Center II, Suite 220
Raleigh, NC 27609-5210
Phone (919) 783-9214 • Fax (919) 783-9266

SUNGATE DESIGN GROUP, P.A.
915 JONES FRANKLIN ROAD
RALEIGH, NORTH CAROLINA 27606
TEL (919) 859-2243 FAX (919) 859-9258
ENG FIRM LICENSE NO. C-690

REVISIONS

08/29/14 – R/W REVISIONS: UPDATED PROPERTY OWNER NAME AND DEED REFERENCE ON PARCEL 30; PROVIDED A DRIVEWAY ACCESS AT –Y32– STA. 29+35.00 RT. ON PARCEL 31. – PJS
11/14/14 – R/W REVISIONS: ADJUSTED STATIONS AND/OR OFFSETS BASED ON THE FIELD STAKING ON PARCELS 30 AND 31. – TEM

8/17/99

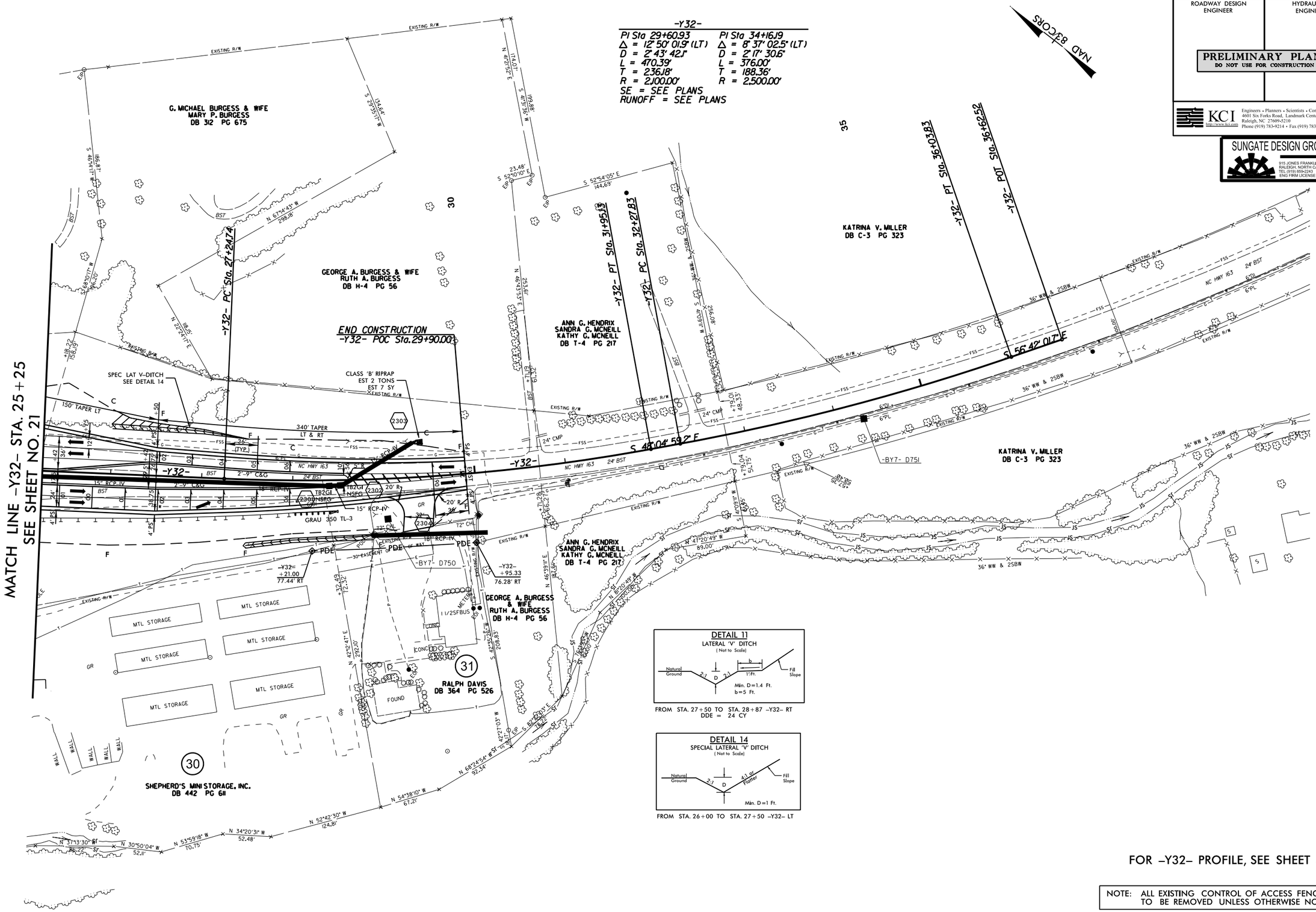

FOR –Y32– PROFILE, SEE SHEET 35

NOTE: ALL EXISTING CONTROL OF ACCESS FENCE TO BE REMOVED UNLESS OTHERWISE NOTED.

13-NOV-2014 11:15
R:\Roadway\Proj\R2915D_Rdy_psh_23.dgn
$$$$USERNAME$$$$